multisteer

BY MULTIFLEX

HYDRAULIC STEERING SYSTEM OUTBOARD : UP TO 115 HP (OH-115)

Instruction Manual, Installation And Maintenance Guide

CE

ISO 10592

QUALITY SYSTEM CERTIFICATION
DNV·GL
IATF 16949

MEMBER
ABYC®
Setting Standards for Safer Boating

multisteer
BY MULTIFLEX

Dear Customer

It gives us immense pleasure to welcome you to the **multisteer** family.

We appreciate your decision to use **multisteer** products. With over two decades of experience, **multisteer** is one of the leading manufacturers of Steering and Control Products for the boating industry.

multisteer products can be sourced in 80 countries through a wide distribution network.

Our range of products includes -

- Power Steering System
- Hydraulic Steering Systems
- Mechanical Steering Systems
- Engine Control Cables & Control Boxes
- PWC Cables
- Steering Wheels
- Boat Trailer Rollers
- Mooring Compensators

multisteer Steering Products are tested and conform to :

Recreational Craft and Personal Watercraft Directive 2013/53/EU.

Extensive research, innovation and technology allows us not only to ensure reliability and quality of products but also helps us to increase our product offerings to our customers, including customization of products and services.

Our true endeavor is to present you with the best quality products and excellent services, thus building a strong foundation to our relationship with you.

Warm regards,

Team Multisteer

multisteer
BY MULTIFLEX

TABLE OF CONTENTS

A. ABOUT THE MANUAL 01

B. DOCUMENT REVISIONS 02

C. SAFETY SYMBOLS USED 02

D. SAFETY WARNINGS 03

E. NAUTICAL WORD REFERENCE 04

F. WARRANTY 05

SECTION 1 - PRODUCT DESCRIPTION

1.1 FUNCTION OF A HYDRAULIC STEERING SYSTEM OH-115 07

1.2 PRODUCT DIMENSIONS 08

1.3 PRODUCT EXPLODED VIEW 09

1.4 TECHNICAL SPECIFICATIONS 12

SECTION 2 - PACKAGING CONTENT

2.1 GUIDELINE FOR PRODUCT HANDLING 13

2.2 PACKING LIST 14

SECTION 3 - PRODUCT INSTALLATION

3.1 DIMENSIONAL REQUIREMENTS OF BOAT 15

3.2 TOOLS REQUIRED DURING INSTALLATION 16

3.3 INSTALLING HELM PUMP (HP-16) 17

3.4 MOUNTING THE STEERING WHEEL 22

3.5 INSTALLING FRONT MOUNT CYLINDER (OC-115) 23

3.6 HOSE CONNECTION (CT-5.0) 29

3.7 OIL FILLING AND PURGING PROCEDURE 33

3.8 TESTING STEERING SYSTEM FOR AIR 39

multisteer
BY MULTIFLEX

TABLE OF CONTENTS

SECTION 4 – TROUBLESHOOTING

4.1 FAULTS, CAUSES & SOLUTION 40

4.2 DISASSEMBLING 41

4.3 DISMANTLING STEERING WHEEL 41

SECTION 5 – REPLACEABLE ITEMS AND SEALS

5.1 HELM HP-16 42

5.2 FRONT MOUNT CYLINDER OC-115 43

SECTION 6 – MAINTENANCE

6.1 PREVENTIVE MAINTENANCE 44

6.2 ROUTINE MAINTENANCE 45

multisteer
BY MULTIFLEX

A. ABOUT THE MANUAL

- The Instruction Manual contains all the essential information for the users regarding the purchased Multiflex product. This document is to be given along with the product.
- ALL RIGHTS ARE RESERVED. Distributing Rights, Part Numbers, Pictures, Text or any content of Multiflex products incorporated in this Instruction Manual property of Multiflex.
- Use this product only for its intended use as described in this Instruction Manual.
- This Instruction Manual itself is an important part of the purchased Multiflex product.
- The Instruction Manual includes - Description of the Products, Safety Warnings and Step wise Procedures for Handling, Assembling, Installation, Maintenance, Disassembling and Replacement of the Products.
- The user must be aware of the content of this Instruction Manual. No activities regarding the product (like its Assembling, Disassembling, Maintenance, Transport etc.) should be carried out without carefully reading this Instruction Manual.
- Immense care has been taken in collecting and checking the information contained in this Instruction Manual to make it as accurate and understandable as possible.

Nothing in this Instruction Manual should be understood as a warranty or a guarantee for the products. Nothing contained in this Manual can be interpreted as an amendment or confirmation of the terms of any purchase contract.

Multiflex reserves all the rights to alter the Instruction Manual format if another format is more suitable for the particular product.

Multiflex takes no responsibility for any possible mistakes due to printing errors in this Manual.

NOTE : It is very important to read this Instruction Manual carefully before carrying out any activities involving the product, its handling and unloading.

multisteer
BY MULTIFLEX

B. DOCUMENT REVISIONS

REV.	DATE	REVISION DESCRIPTION
1	February-2021	First Edition OH-115-IM1

C. SAFETY SYMBOLS

The following Symbols / Terms define the various HAZARD identifications in this Instruction Manual to ensure User Safety and to assure correct Installation and Operation of the Product.

DANGER :

The "DANGER" symbol indicates an immediate hazardous situation which, if not avoided, will result in death or serious injury.

WARNING :

The "WARNING" symbol indicates a potentially hazardous situation which, if not avoided, could result in death or serious injury.

CAUTION :

The "CAUTION" symbol indicates attention to unsafe practices which, if not avoided, could result in minor or moderate injury or component damage.

NOTICE :

The "NOTICE" symbol indicates important information for the correct installation and for maintenance that does not cause personal injury or component damage.

SKILLED LABOUR REQUIRED :

The adjacent symbol indicates that all the activities should be carried out by a Professional Marine Technician.

D. SAFETY WARNINGS

It is very important to read this section carefully to avoid any personal harm or injury and also to prevent machinery damage.

Multisteer shall not be responsible for any damage because of the user's negligence.

NOTE : It is advised to read the other manuals as well which are provided with the Steering System Components.

DANGER :

- DO NOT PUT YOUR HANDS BETWEEN MOVING PARTS.
- Do not disable the safety devices.
- Do not use this equipment for a purpose different from the one it has been designed for, which is specified in the Installation and Maintenance Manual.
- Do not let unskilled staff perform the Installation.

WARNING : DO NOT operate boat if any component is not in proper working condition.

SAFETY RULES :

DURING INSTALLATION :

- DO NOT modify or substitute any component without written approval from Multiflex.
- Conform with all system ratings / regulations.
- Hydraulic Cylinder must be compatible with the rated power of engine / engines.
- Hydraulic Cylinder must be compatible with the engine / engines installed.
- There should be **NO** interference between the Steering Cylinder(s), Tie-bar and the Transom, Splash-well or Outboard engine or any combination of these parts by performing the following steps.
  - With Engine fully tilted DOWN, turn Steering Wheel from hard over to hard over and confirm that **NO** interference occurs.
  - Follow this above step for Engines tilted up.
- Make sure that the Steering Cylinder can be fully extended / retracted in both directions and fully tilt and trim without stretching, rubbing the Hydraulic Hoses.
- Check fluid level in Helm Pump. Also check all fittings for leakage.
- Confirm that extruded nylon tubing has NOT been substituted for Multisteer Steering Hose.
- Never use a wire coil type trim switch with a Hydraulic Steering System . This may lead to winding up the wire tight around the Steering Wheel Shaft which will avert further Steering.

multisteer
BY MULTIFLEX

E. NAUTICAL WORD REFERENCE

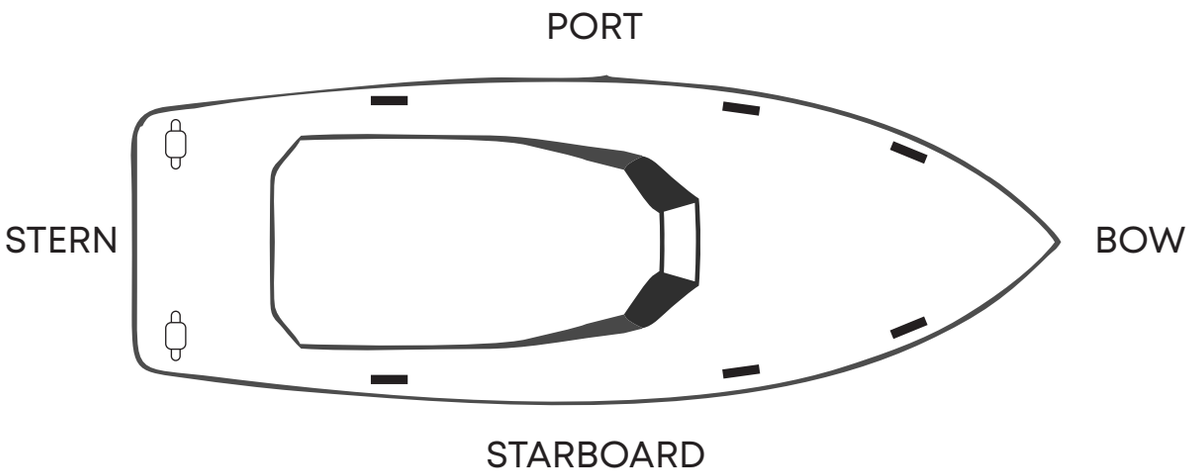

F. WARRANTY

PRODUCT WARRANTY

MULTISTEER* warrants all products for a period of One (1) year from the date of purchase by the consumer or Two (2) years from the month of manufacture. In both cases, serial number of the product or kit should be shared with Multisteer. Multisteer products are to be free from any defects due to material or manufacturing workmanship. This will be subject to exclusions listed below. Improper installation automatically voids this warranty. Installation is to be performed by a qualified marine technician only. Should the products be altered / disassembled in any manner the warranty shall be void.

If the products are used commercially or in any rental or income generating activity, the warranty shall be:

- For Mechanical Product: 90 days/3 months from the date of purchase
- For Hydraulic Product: 180 days/6 months from the date of purchase

(It is mandatory to provide proof of purchase for warranty claim. No claim shall be entertained without the proof of purchase)

EXCLUSION

- Failure caused by normal wear and tear, climate conditions, miss-use, neglect, lack of proper maintenance, accidents, fire, racing, overloading, modification, beaching or grounding of vessels, collision, impacts, towing, use during war or hostilities, commercial use
- Components not manufactured by MULTISTEER
- Cost of removal, re-installation of any component (including components manufactured by MULTISTEER) disassembly or reassembly of any parts, units or products containing the component
- Components not manufactured by MULTISTEER whether warranted by the other manufacturer
- Any product that has not been properly and professionally installed
- Any product that has been installed other than as recommended in our installation or operation instructions or specifications
- Has been used on boat / engine combination where the engine horsepower exceeds the rating defined by the boat manufacturer
- Has been used with other products that in the opinion of Multisteer are not compatible

LIMITATIONS

The repair or replacement of any defective parts shall be the PURCHASERS SOLE and EXCLUSIVE Remedy and MULTISTEER's sole and exclusive liability under this warranty. LABOR FOR ANY REMOVAL, REINSTALLATION OR REPLACEMENT IS NOT INCLUDED. MULTISTEER's obligation under this warranty is limited to the repair or replacement of product identified by MULTISTEER as defective, when delivered by the purchaser pursuant to written authorization and instructions from MULTISTEER. Shipping will be prepaid to MULTISTEER's manufacturing facility or any other designated plant or repair facility. Repaired or replaced items are warranted as provided herein for the unexpired portion of the applicable warranty period.

THIS WARRANTY, AND THE RIGHTS AND REMEDIES UNDER IT, IS EXCLUSIVE AND IS GIVEN IN PLACE OF ALL OTHER WARRANTIES, WHETHER EXPRESSED OR IMPLIED. INCLUDING ANY IMPLIED WARRANTY OF MERCHANTABILITY OR FITNESS FOR PARTICULAR PURPOSE, WHETHER ARISING BY LAW, CONDUCT OR USAGE OF TRADE, PURCHASER'S REMEDIES SHALL BE LIMITED AS STATED HEREIN AND MULTISTEER SHALL NOT BE LIABLE FOR ANY INCIDENTAL, CONSEQUENTIAL OR INDIRECT DAMAGES OR LOSSES RESULTING FROM DEFECTS. ANY ADDITIONAL SELLERS BE IT WHOLESALE OR RETAIL ARE NOT A CO-WARRANTOR AND ARE NOT AUTHORIZED BY MULTISTEER TO AMEND OR MODIFY THIS LIMITED WARRANTY IN ANY MANNER.

MULTISTEER employees or associates or representatives oral or any other written statements shall not constitute warranties and should not be relied by the customers and are not part of the warranty stated herein.

WARRANTY MAY NOT BE TRANSFERRED TO SUBSEQUENT PURCHASERS.

MISCELLANEOUS

MULTISTEER reserves the right to make changes in the design, construction, and manufacturing of its products at any time without notice and without any obligation to incorporate such changes into products of prior manufacture. This limited warranty applies to new components only sold by MULTISTEER and its group. This limited warranty contains the entire agreements between MULTISTEER and its group and the purchaser and supersedes all prior agreements, discussions, negotiations, commitments, and representations, whether oral or written, between them regarding MULTISTEER and its group's warranty.

OUR PRODUCTS ARE NOT INTENDED FOR USE IN RACING APPLICATIONS WHETHER PROFESSIONAL AMATEUR. OUR WARRANTY DOES NOT COVER LABOR, TOWING, OR ANY OTHER ASSOCIATED EXPENSES. FURTHER, IT DOES NOT COVER PRODUCTS THAT HAVE BEEN IMPROPERLY INSTALLED, DAMAGED DURING INSTALLATION, MISAPPLIED, OR MISUSED.

MULTISTEER shall be THE SOLE ENTITY FOR DETERMINATION OF A DEFECTIVE PRODUCT. DEFECT WILL NOT BE DETERMINED UNTIL SAID PRODUCT HAS BEEN INSPECTED BY MULTISTEER AND ITS GROUP AT THEIR MANUFACTURING FACILITY SPECIFIED AT TIME OF CLAIM.

Any product that is presumed to be defective should be reported to MULTISTEER and its group within 48 hours of discovery. Upon notification MULTISTEER and its group will attempt to troubleshoot the problem with our customer over the phone / email. If we are unable to resolve the problem MULTISTEER and its group will issue a Returns Material Authorization Code and ask that the product in question be sent back to MULTISTEER and its group specified facility with all parts and original packaging. All returned products must be returned freight prepaid.

If any part of the Limited Warranty is determined to be void or illegal the remainder shall remain in full force and effect.

If you need to begin the warranty process, please email what your product is, current issue, name and contact number to **technical@multiflexmarine.com**

A team member will review your inquiry and get back to you within 48 hours.

***Multisteer is a brand owned by GMG Techno Trades Pvt. Ltd., India.**

multisteer
BY MULTIFLEX

SECTION 1 - PRODUCT DESCRIPTION

1.1 FUNCTION OF A HYDRAULIC STEERING SYSTEM OH-115

The Multisteer Hydraulic System OH-115 conform to Recreational Craft and Personal Watercraft Directive 2013/53/EU in accordance with EN ISO 10592:1995 / A1:2000.

The Steering System is designed to operate in an ambient temperature ranging between -20°C (4°F) and +60°C (+140°F).

All the components of system are explicitly manufactured considering marine environment.

It offers great durability and safety even in extreme environments.

The Multisteer Hydraulic Steering System consists of :

1. **A Manual Axial Helm Pump : HP-16**

   This is an axial piston driven pump which draws and pushes the flow of Steering Fluid when the Wheel mounted on the Helm Shaft is rotated. Its volume determines the number of turns required hard over to hard over to guide the engine. A lock valve prevents untimely engine movement when the Helm is not operated and a pressure relief valve protects the system against unusual pressure increase.

2. **A Front Mount Single Balanced Cylinder : OC-115**

   The Cylinder provides linear movement to the Engine or Rudder depending on application, Steering the boat to Starboard or Port.

3. **A Pair of Thermoplastic Hydraulic Hoses to connect Helm with Cylinder : CT-5.0**

   The Hose Tube is designed to transfer Steering Fluid from Helm pump to Cylinder and vice versa. Hoses are flexible so as to be routed through complex or small bending radii and are tested at higher pressure than maximum working pressure to prevent Oil leakage.

4. **A Bottle of High Viscosity Index Hydraulic Steering Fluid : HO-150**

   Hydraulic Steering Fluid is required, where the Helm pump while being turned pushes the fluid, such that it travels through the tubing and displaces the Cylinder.

For selecting the Helm pump, one must consider the volume of the Cylinder. The number of Steering Wheel turns from left to right (lock to lock) is determined by the ratio between the volume of the Cylinder to the volume of pump in one rotation.

For Example : Here, the pump has a flow rate of 16 cc [1.0 ci] and the Cylinder has a volume of 92.5 cc [5.6 ci], then the following formula applies: 92.5/16 = 5.8. Therefore, the Steering Wheel will rotate about 5.8 times before the Cylinder is completely shifted from left to right or vice versa. Steering Wheel turns less than 5 are not recommended since it requires heavy driving load. Also, it is not recommended to have more than 9 turns as it makes the system very slow in responding to the Steering Wheel. The maximum operating pressure is equal to 5.0 MPa (50 bars) (725 psi).

multisteer
BY MULTIFLEX

1.2 PRODUCT DIMENSIONS

HYDRAULIC HELM PUMP : HP-16

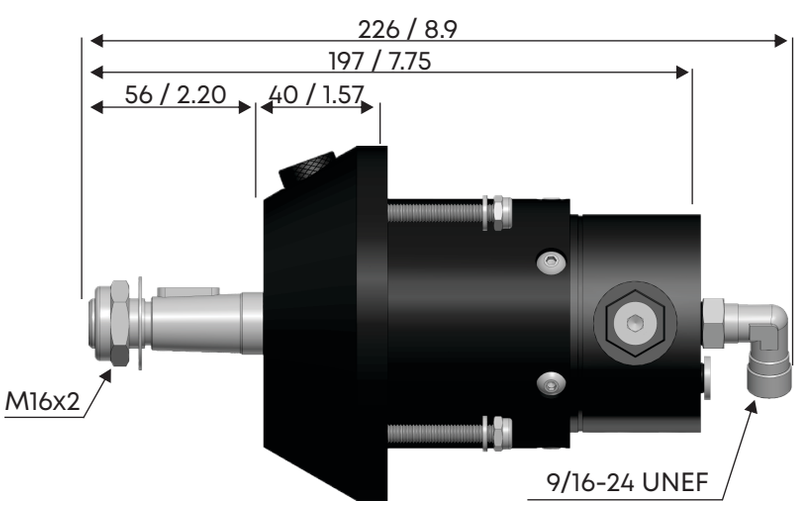

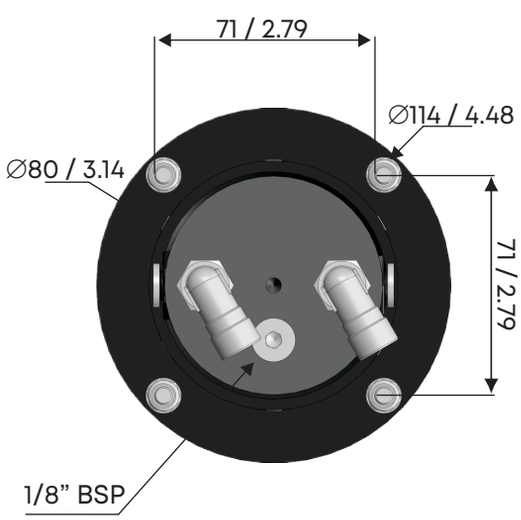

All Dimensions are in mm / Inch

multisteer
BY MULTIFLEX

1.3 PRODUCT EXPLODED VIEW

HYDRAULIC HELM PUMP : HP-16

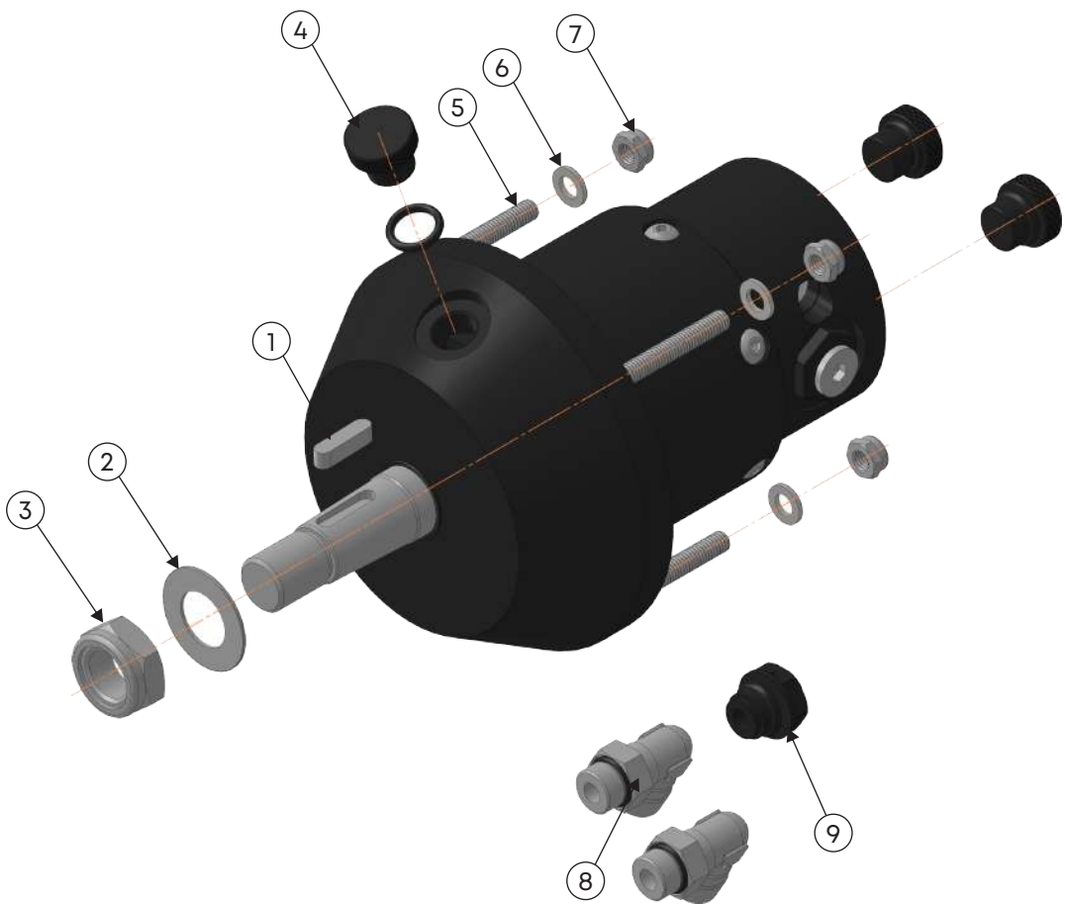

Item No.	Description	Qty.
1	Flat Key	01
2	Shaft Washer	01
3	Nyloc Nut	01
4	Dummy Plug- 1/4” BSP / Non Vented Plug	03
5	Stud - Flange	04
6	Stud Washer	04
7	Nyloc Nut	04
8	Elbow	02
9	Oil Fill Plug with Breather Hole / Vented Plug	01

multisteer
BY MULTIFLEX

HYDRAULIC CYLINDER : OC-115

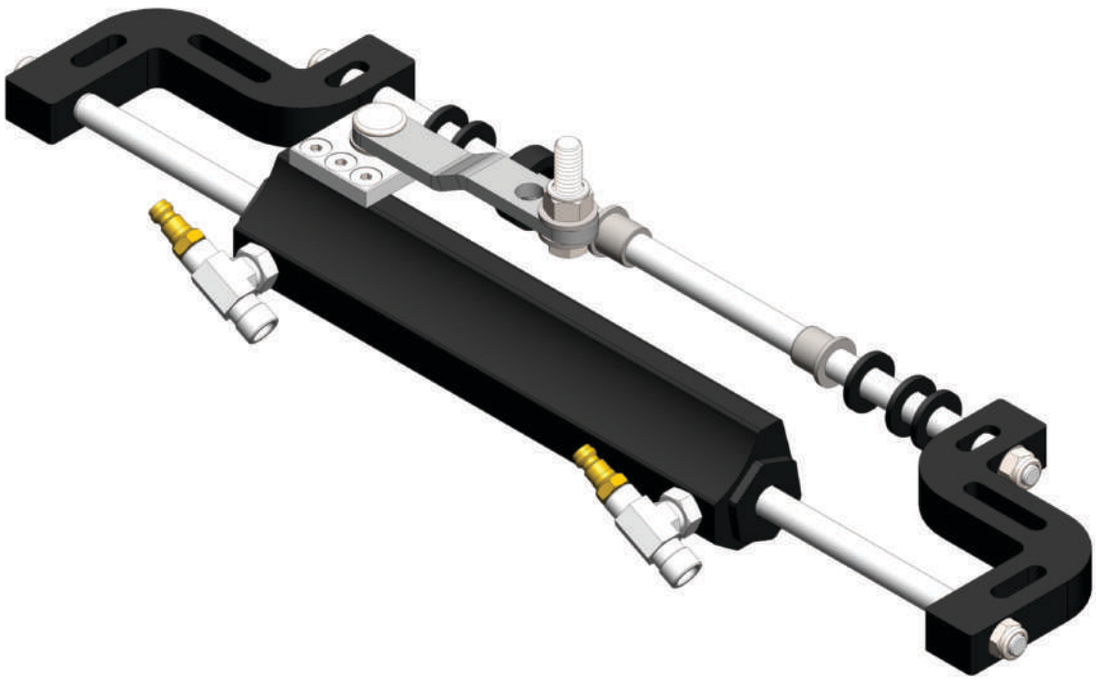

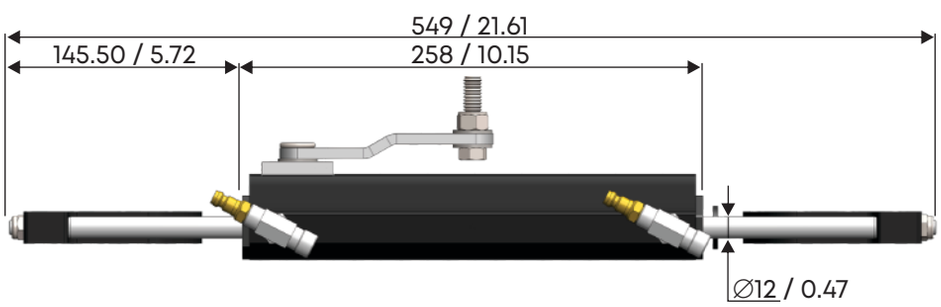

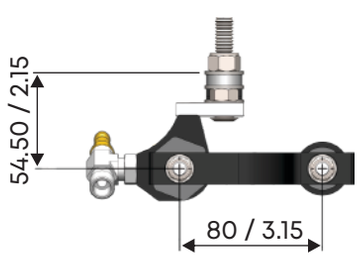

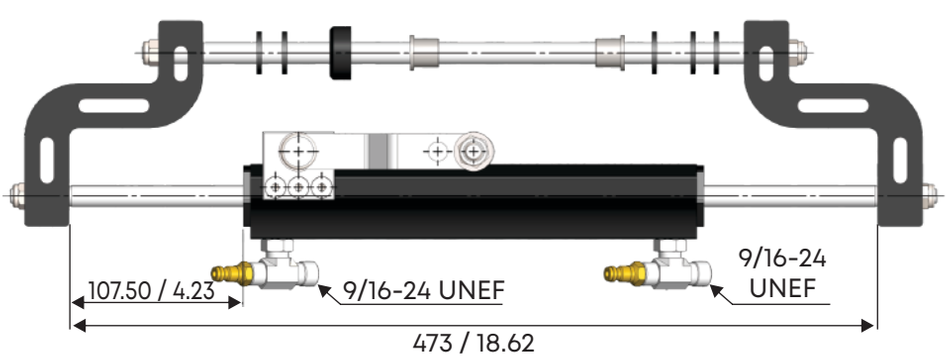

All Dimensions are in mm / Inch

multisteer
BY MULTIFLEX

HYDRAULIC CYLINDER : OC-115

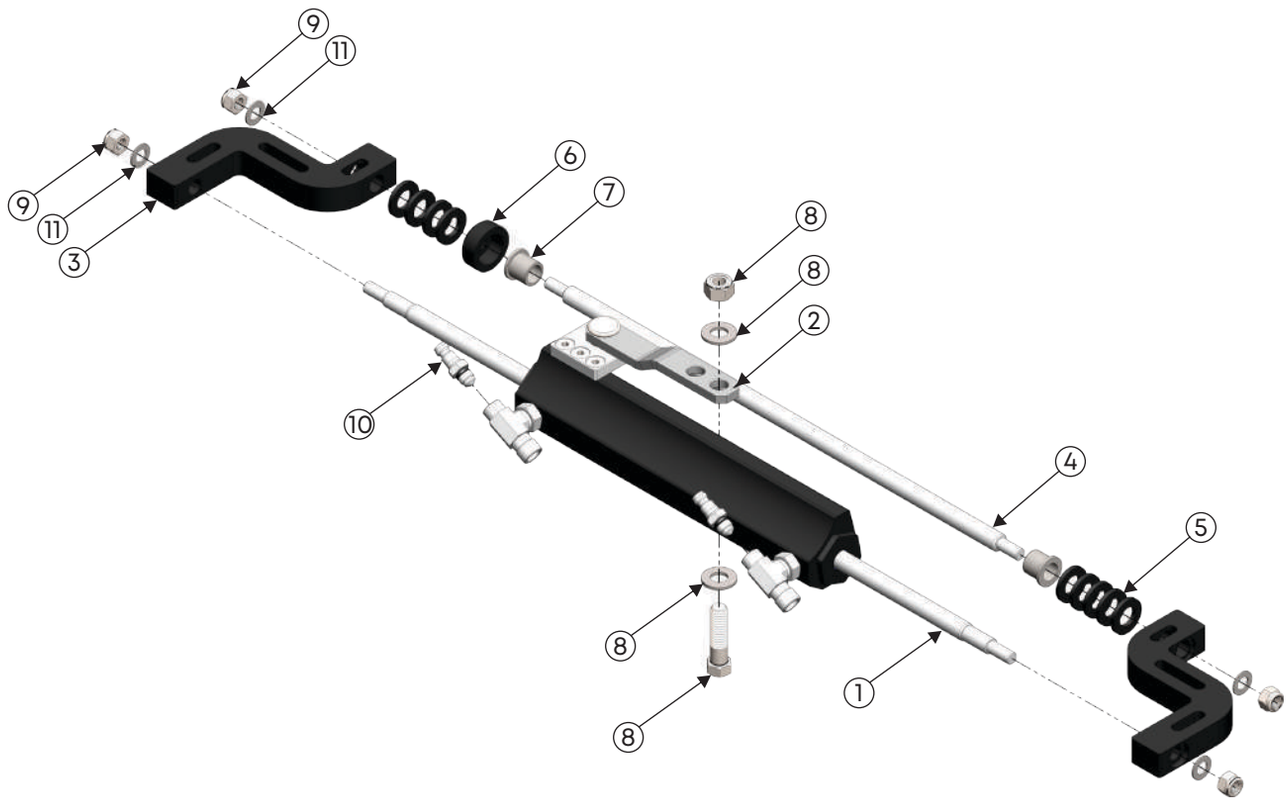

Item No.	Description	Qty.
1	Piston Rod	1
2	Tiller Plate	1
3	Support Bracket	2
4	Center Shaft	1
5	Spacer / Washer For OC-115	9
6	Mounting Spacer	1
7	Support Rod Bush	2
8	Hex Stud Assembly	1
9	Nyloc Nut For Piston Rod / Center Shaft	4
10	Air Bleed Plug	2
11	Piston Rod / Center Shaft Washer	4

multisteer
BY MULTIFLEX

1.4 TECHNICAL SPECIFICATIONS

HELM HP-16

Model No.	Volume cc	Volume ci	Port Threads (UNEF)	Relief/Design* Pressure in Bar	Recommended Steering Wheel Diameter	Weight in Kg
HP-16	16	0.9	9/16-24	50	280 mm	2.3

CYLINDER OC-115

Model No.	Volume cc	Volume ci	Port Threads (UNEF)	Force (Kgf)	Stroke (mm)	Air Bleeder Fittings	Weight (Kg)
OC-115	92.5	5.6	9/16-24	251	184	AB2	2.1

STEERING FLUID HO-150

Model No.	Viscosity at 40°	Viscosity Index	Pour Point	Flash Point
HO-150	15.5 cSt	>150	-40 Degrees	>188 Degrees

⚠ CAUTION :

We highly recommend the use of Multisteer Hydraulic Oil HO-150. Use of non-recommended fluid may result in hard Steering.

HYDRAULIC HOSES CT-5.0

Model No.	Description	End Connector
5.0	5 Meters (16.4 Feet)	HC-C1

multisteer
BY MULTIFLEX

SECTION 2 - PACKAGING CONTENT

2.1 GUIDELINE FOR PRODUCT HANDLING

Multisteer Hydraulic Steering Kit OH-115 :

The Net & Gross Weight of Multisteer Hydraulic Steering Kit OH-115 is 6.6 kg (14.5 pounds) & 8.5 kg (18.7 pounds). Thus, the Helm can be handled manually.

Multisteer Hydraulic Helm HP-16 :

The Net & Gross Weight of Multisteer Hydraulic Helm HP-16 is 2.3 kg (5.0 pounds) & 2.6 kg (5.7 pounds). Thus, the Helm can be handled manually.

Multisteer Hydraulic Cylinder OC-115 :

The Net & Gross Weight of Multisteer Hydraulic Cylinder OC-115 is 2.0 kg (4.4 pounds) & 2.3 kg (5.0 pounds). Thus, the Cylinder can be handled manually.

⚠ CAUTION :

The staff handling the load must operate using all required PPE (individual protection devices) as required by the applicable standard on accident prevention at the workplace.

multisteer
BY MULTIFLEX

2.2 PACKING LIST

HYDRAULIC STEERING SYSTEM (OH-115)
PACKAGING ITEMS

Model No.	Description		Part No.
HYDRAULIC STEERING KIT		**1**	**OH-115**
1	**HELM PUMP**	**1**	**HP-16**
A	WOODRUFF KEY / FLAT KEY	1	HP-WK4
B	SHAFT WASHER AND NUT	1	SK-HP1
C	VENTED PLUG	1	VP1
D	NON-VENTED PLUG	3	NP1
E	ELBOW ASSEMBLY	2	EB1
F	MOUNTING TEMPLATE	1	HP-16-MT
G	MOUNTING NUTS AND STUDS	4	HP-FN1 & HP-FS1
2	**HYDRAULIC CYLINDER**	**1**	**OC-115**
A	" T " ADAPTOR ASSEMBLEY	2	TF1-AB2
B	RUBBER CAP	4	EB1-RC
C	HEX STUD ASSEMBLY FOR TILLER PLATE	1	OC-TP-SD-03
3	OIL BOTTLE	1	HO-150
4	HOSE KIT	2	CT-5.0
5	OIL COLLECTION BOTTLE	1	OC-B1
6	OIL COLLECTION TUBE	2	OC-T1
7	OIL FILLING KIT	1	OF-01
8	INSTALLATION MANUAL	1	OH-115-IM1
9	DECLARATION OF CONFORMITY : HELM	1	HP-DC-16
10	DECLARATION OF CONFORMITY : CYLINDER	1	OC-DC-115
11	SILICA GEL	2	OH-SG

NOTE : Please ensure all the above components are in the package in a proper condition. In case of any missing components or damage, please contact the Seller for warranty claim.

⚠ CAUTION :

The packaging waste must be disposed properly according to the existing laws.

multisteer
BY MULTIFLEX

SECTION 3 - PRODUCT INSTALLATION

3.1 DIMENSIONAL REQUIREMENTS OF BOAT

The following diagram shows the minimum splash well dimensions for installation of Multisteer Hydraulic Cylinder. The said dimensions must be followed in order to prevent the Cylinder from getting damaged when the outboard engine is fully tilted upwards.

The diagram also shows the minimum transom dimensions needed for the Installation of Cylinder and the correct movement of the engine corresponding to Cylinder.

⚠ WARNING :

JACK PLATE ON THE TRANSOM : When you want to install jack plate, it will change all the application clearances mentioned above. You need to recheck the new clearance which must be completed with fully tilting of the engine in conjunction with the vertical movement of the jack plate in all the possible positions. By any chance, if you observe the Cylinder may come in contact with the splash well, transom and / or jack plate, immediately stop the installation! Please refer the Instruction Manual of the jack plate manufacturer to limit the upper or lower direction where the intrusion may occur.

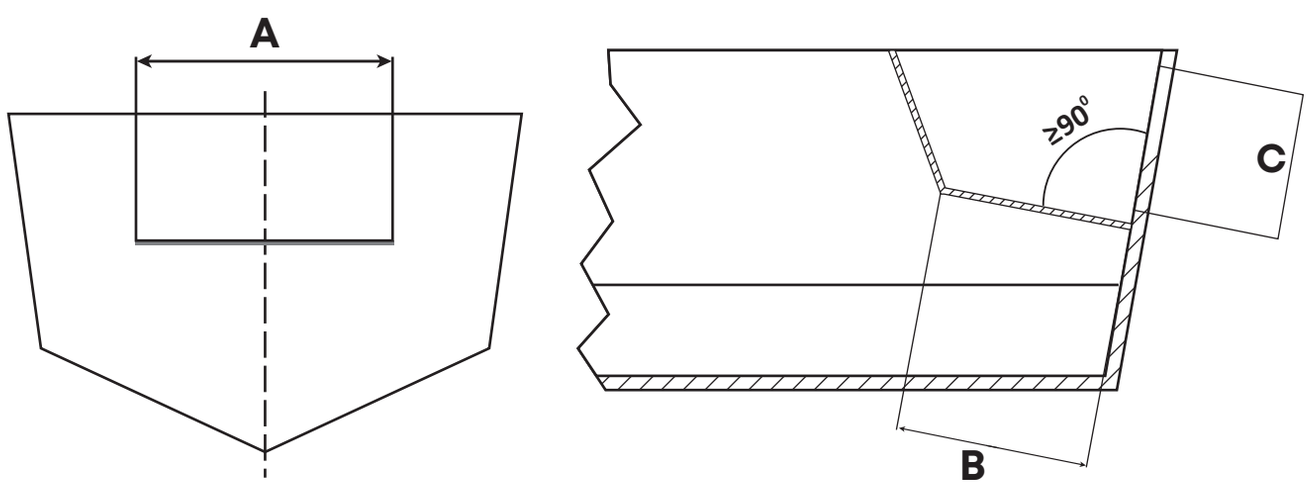

No. of Engines	A	B	C	Min. Engine Center Distance
1	22" (559 mm)	6" (152 mm)	6" (152 mm)	N/A
2	44" (1118 mm)	6" (152 mm)	6" (152 mm)	26" (660 mm)

3.2 TOOLS REQUIRED DURING INSTALLATION

The following are the necessary tools required for the proper installation of the Multisteer Hydraulic Steering System OH-115

3" (77mm), 3 ¼" (82 mm) diameter Hole Saw or Key Hole Saw

7/16", 9/16", 1/2" Box or Open Type Wrench / Spanner

Torque Wrench

9, 12, 13, 14, 16, 17 mm Wrench / Spanner, Box or Open End type

3mm (1/8")" Allen Key / Wrench

Marine Grease

Hand Drilling Machine

5/16" (8mm) and 1/4" (7mm) dia. Drill Bit

3.3 INSTALLING HELM PUMP (HP-16)

Step 1 : Choose a suitable position to install the Steering Helm. Confirm if there is adequate space to move the Steering Wheel on the front side and sufficient space for the Helm with the Hoses and Fittings assembled on the back side of dashboard. (The Dashboard should be at an angle of 20 degrees to vertical plane as shown in below fig.)

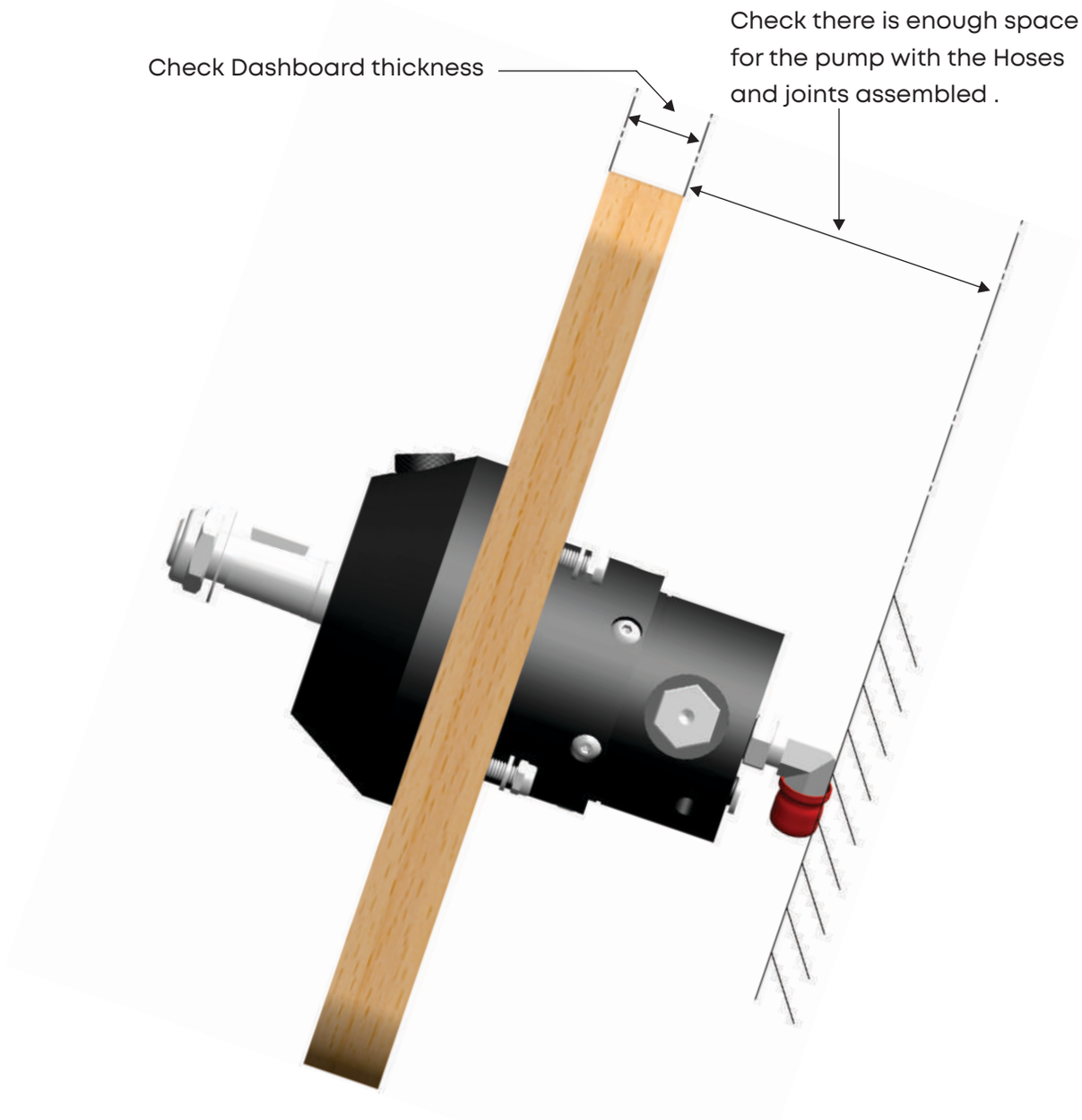

⚠ WARNING : **SKILLED LABOR REQUIRED :**

For proper fastening of the Helm, the thickness of the dashboard must be minimum 12.7 mm (0.5") and maximum 54mm (2.1") thick.

Thickness below or above these dimensions could lead to unsafe Steering.

After assembling the Helm, ensure that the 4 Nyloc Nuts (7) supplied are properly screwed on the Flange Studs (5).

STEP 2 : Paste the Helm Mounting Template supplied with Helm on the dashboard at a suitable position where the Helm is to be mounted with the help of tape.

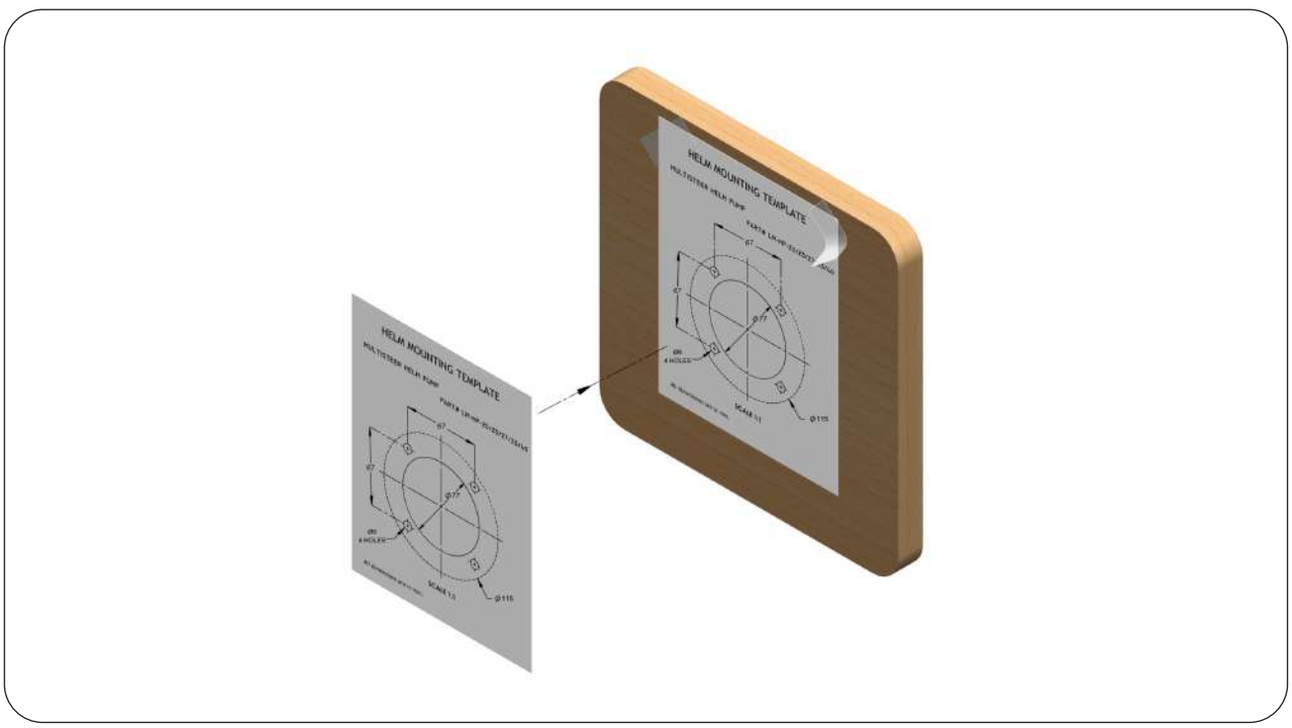

STEP 3 : Make 4 holes for the Flange Studs with the help of a Hand Drill and a big one for the Center Hole with the help of hole saw.

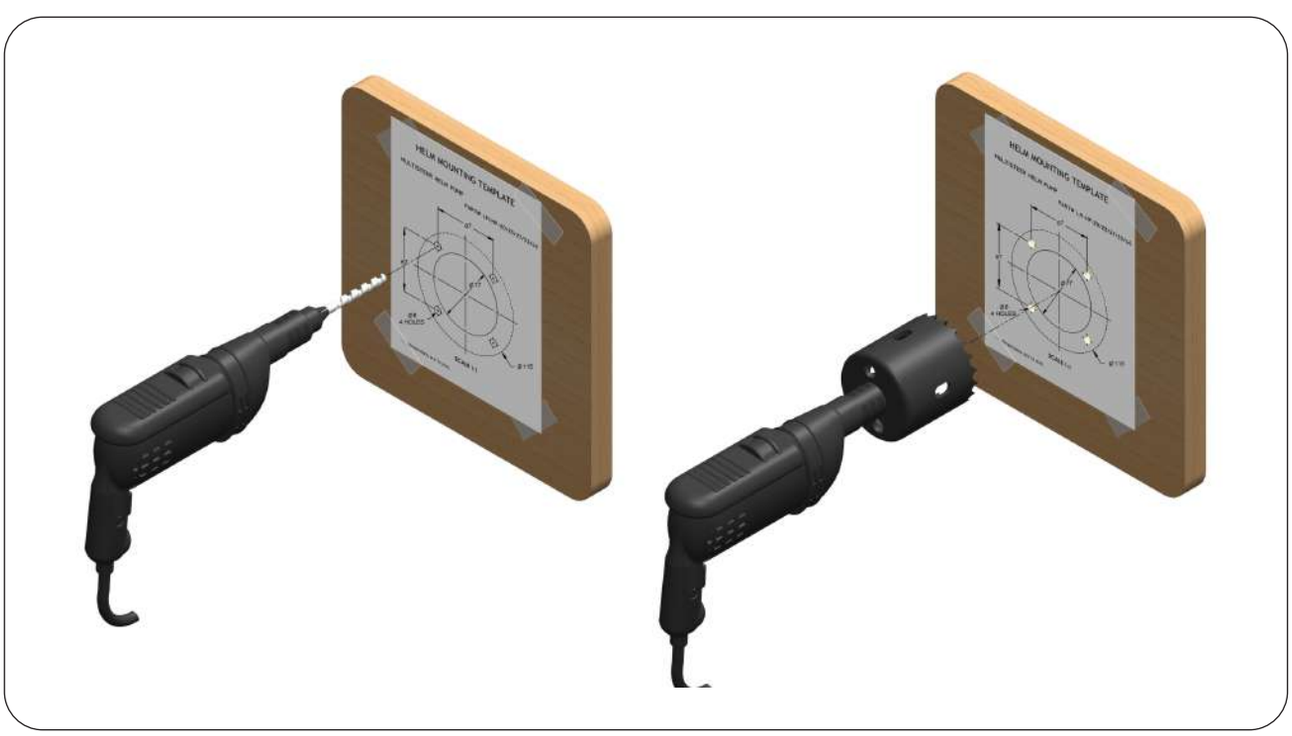

STEP 4 : Remove the Protective Plugs (4). Also Remove 4 Nyloc Nuts (7) and Washer (6) from the Flange Studs (5) of Helm with the help of 10 mm Wrench.

STEP 5 : Insert and tighten by hand the Elbow Fittings (8) until they are fully seated, then tighten with a wrench. Turning again from 1.5 to 2.5 turns, for their best orientation for the Hose connection. However do not exceed a maximum torque of 17.6 Nm (13 lb ft). Also insert the Vented Plug (9) into Oil Filling Port.

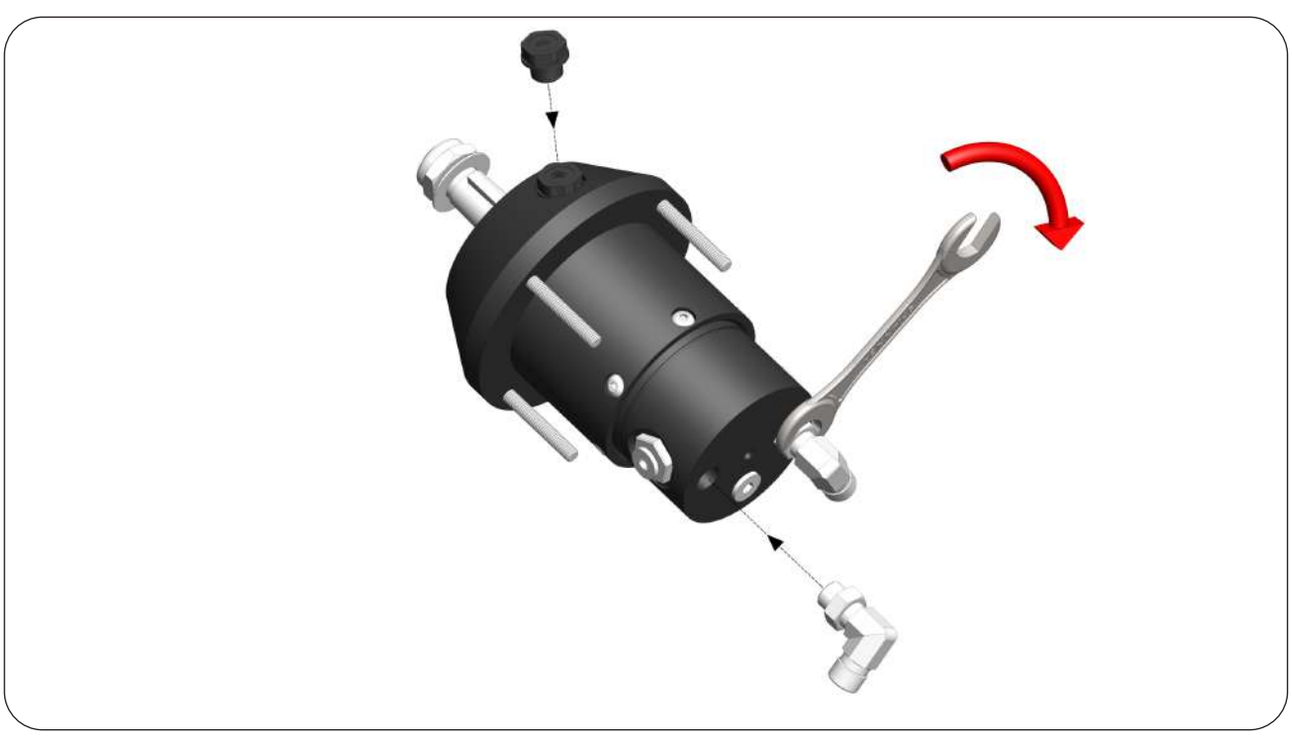

STEP 6 : Insert the Helm from the front of the dashboard with the Vented Plug (9) turned upwards matching the 4 Flange Studs (5) moving inside the 4 holes on the dashboard.

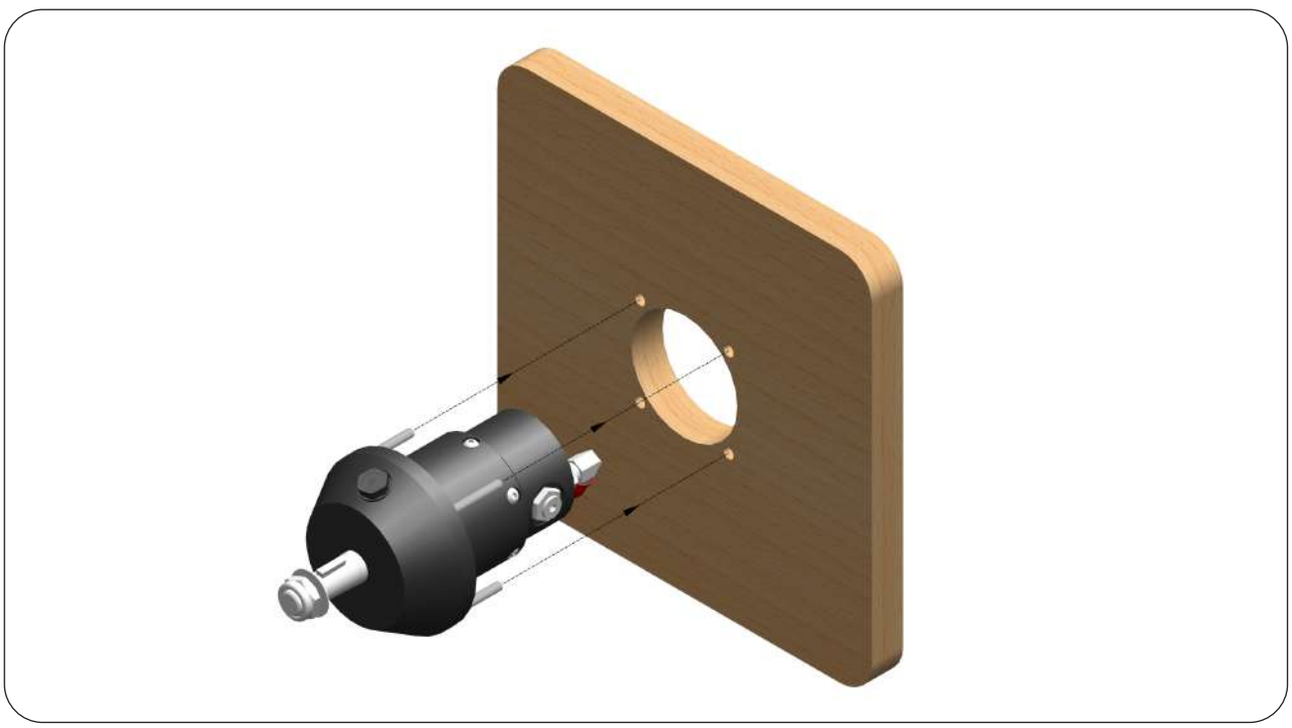

STEP 7 : Tighten the 4 Nyloc Nuts (7) & the 4 Washers (6) through the Flange Studs (5) of the Helm to the dashboard with the help of a 10mm Wrench with the torque of a 10 Nm (7.4 lb ft).

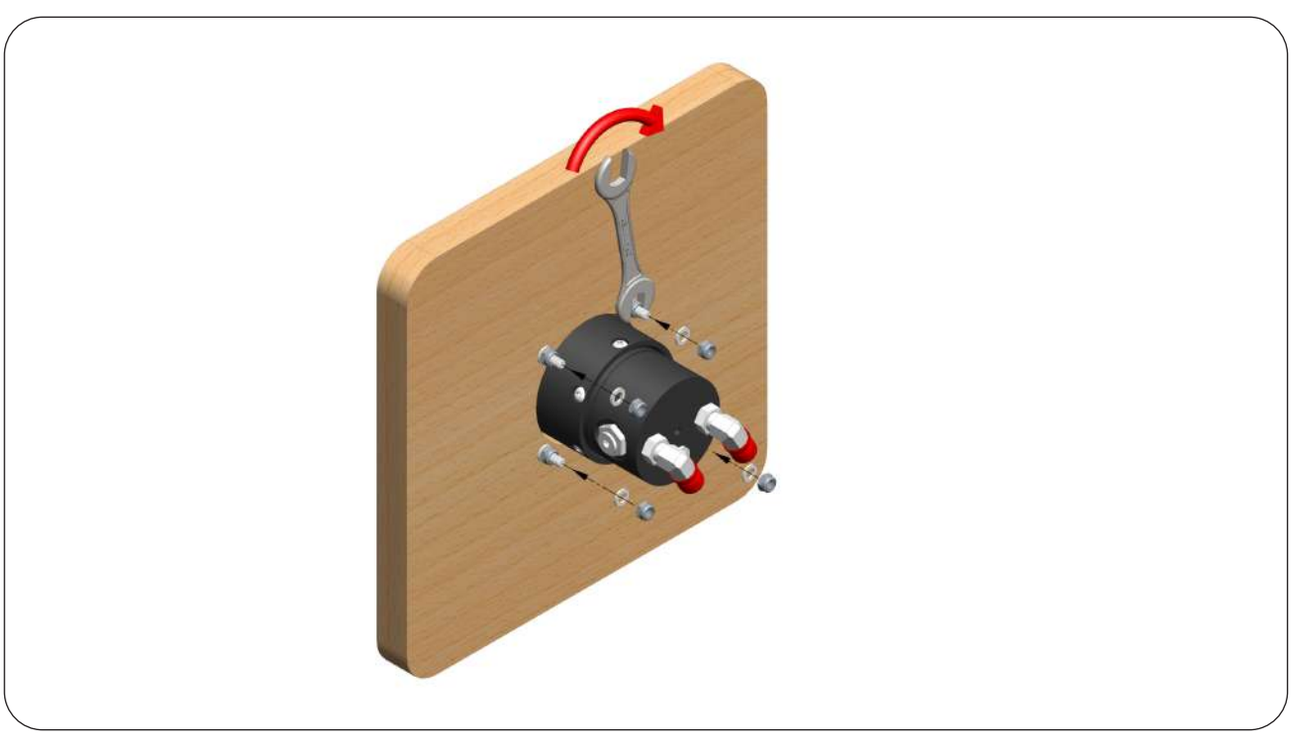

⚠ CAUTION :

If the Nyloc Nuts (7) are removed, they must be replaced immediately.

Is it important to install the Helm with the Vented Plug (9) positioned upwards (see picture) to allow complete filling and purging of the system (see section 3.7 “OIL FILLING AND PURGING PROCEDURE”).

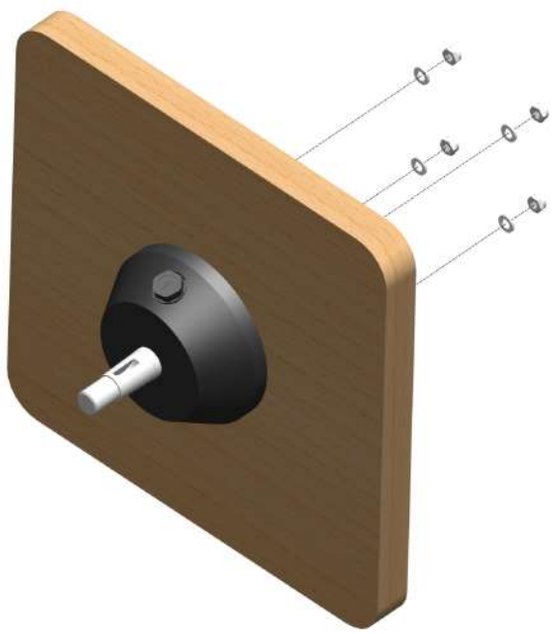

3.4 MOUNTING THE STEERING WHEEL

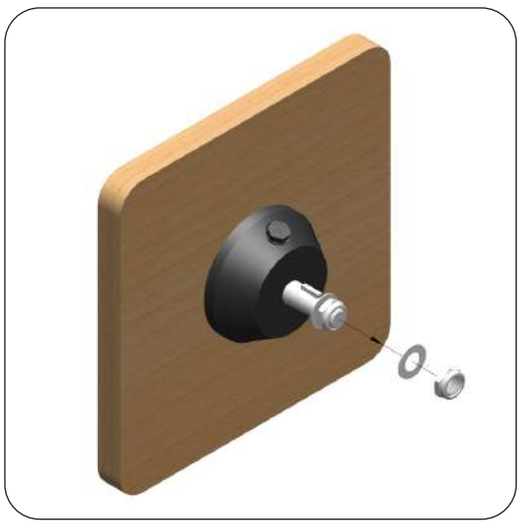

STEP 1 : Remove the Nylock Nut (3) & Washer (2) from the Helm Shaft.

STEP 2 : Apply grease lightly on the Tapered Shaft of the Helm. Slide the Steering Wheel supplied separately on the Helm Shaft.

STEP 3 : Fit the Steering Wheel on the Shaft by inserting the Specific Key (1) in its compartment. Insert the Washer (2) and use a 20mm hexagonal Wrench to tighten the Self-Locking Nut (3) with a 40 Nm (29.5 lb ft) torque.

STEP 4 : Fix the Wheel cap in the Center of the Wheel where cap slot is provided.

⚠ CAUTION :

Tighten the Steering Wheel Shaft Nut (3) before filling and purging the Steering System. Tighten Nut to 17 Nm (150 in.lb.). Do not exceed 22 Nm (200 in.lb.). If the Self-Locking Nut is removed, it must be replaced with new Self-Locking Nut and not used one.

3.5 INSTALLING FRONT MOUNT CYLINDER (OC-115)

⚠ SKILLED LABOR REQUIRED :

STEP 1 : Remove the Nyloc Nut (9) and Washers (11) from the Center Shaft / Support Rod (4) and Piston Rod (1).

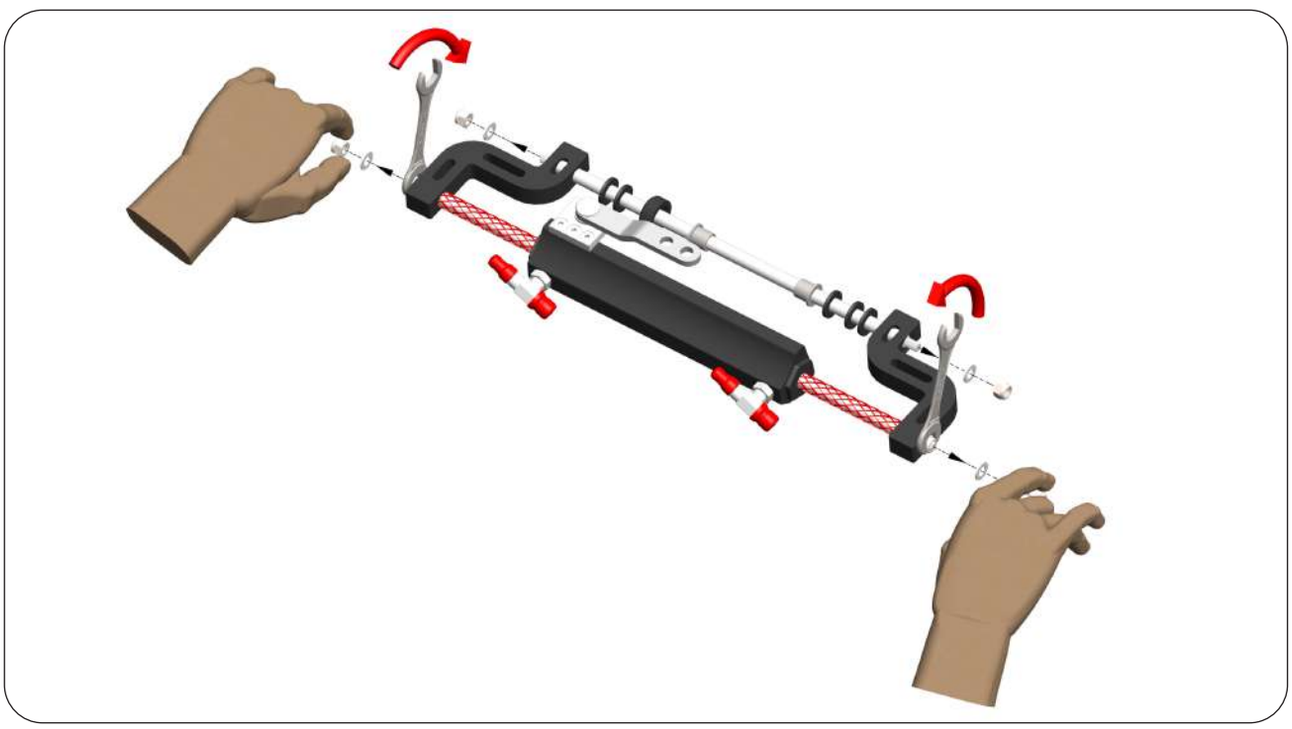

STEP 2 : Disassemble the Cylinder by removing Support Brackets (3), Bush (7), Spacers / Washer (5) & Mounting Spacer (6).

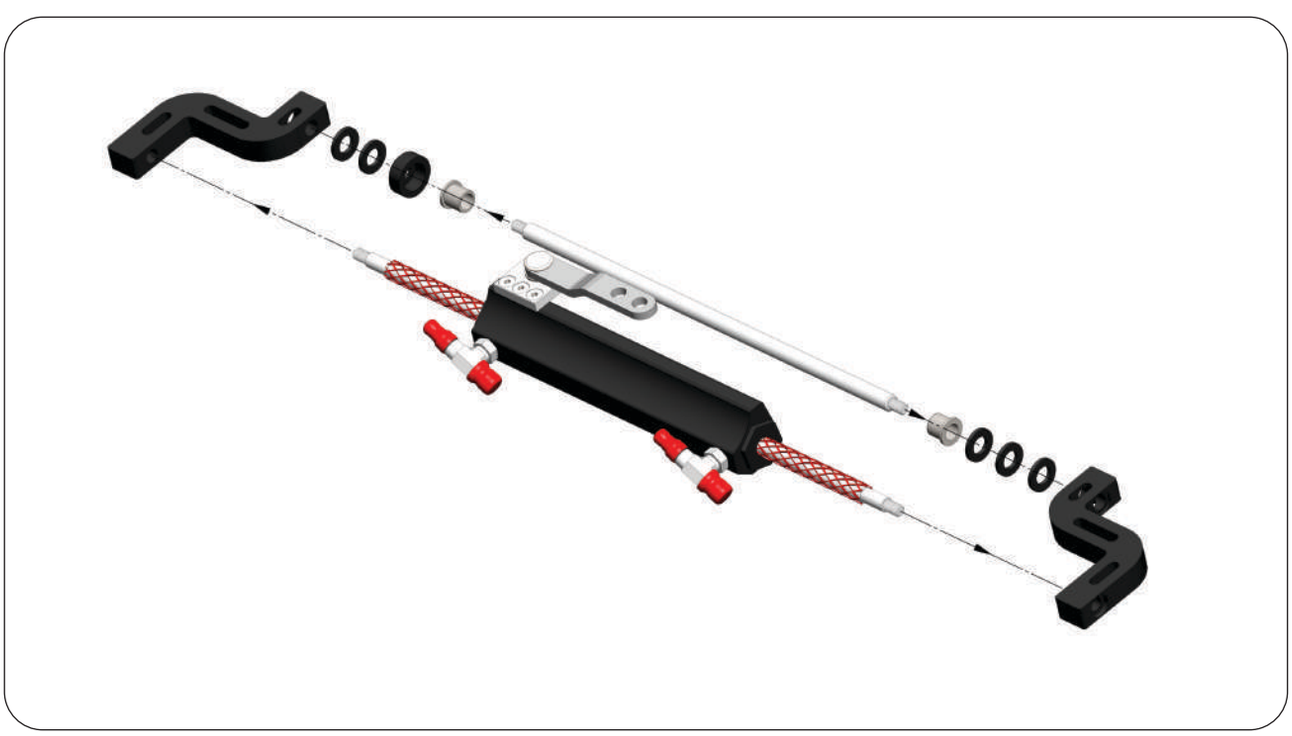

STEP 3 : Apply Marine Grade Grease on the Center Shaft (4) and insert the Center Shaft into the Tilt Tube of Engine.

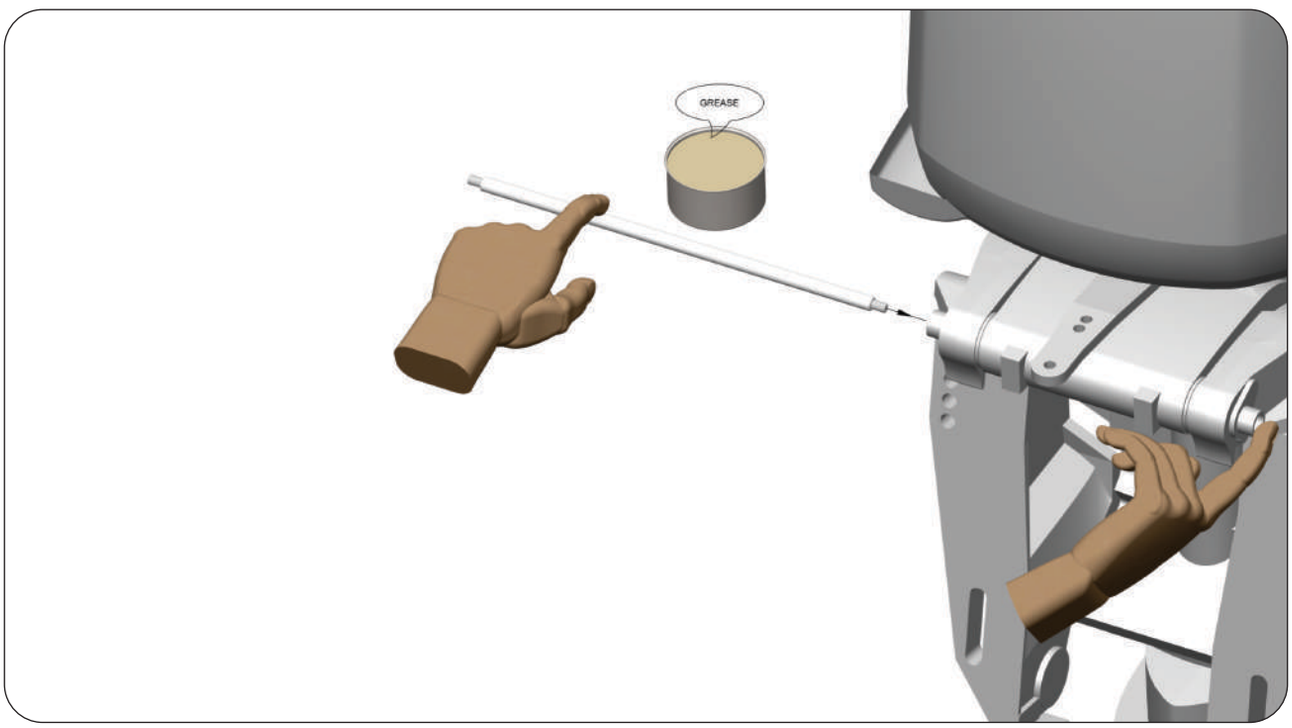

STEP 4 : Assemble the Tiller Hex Stud Assembly (8) into the Tiller Plate (2) of Cylinder as shown.

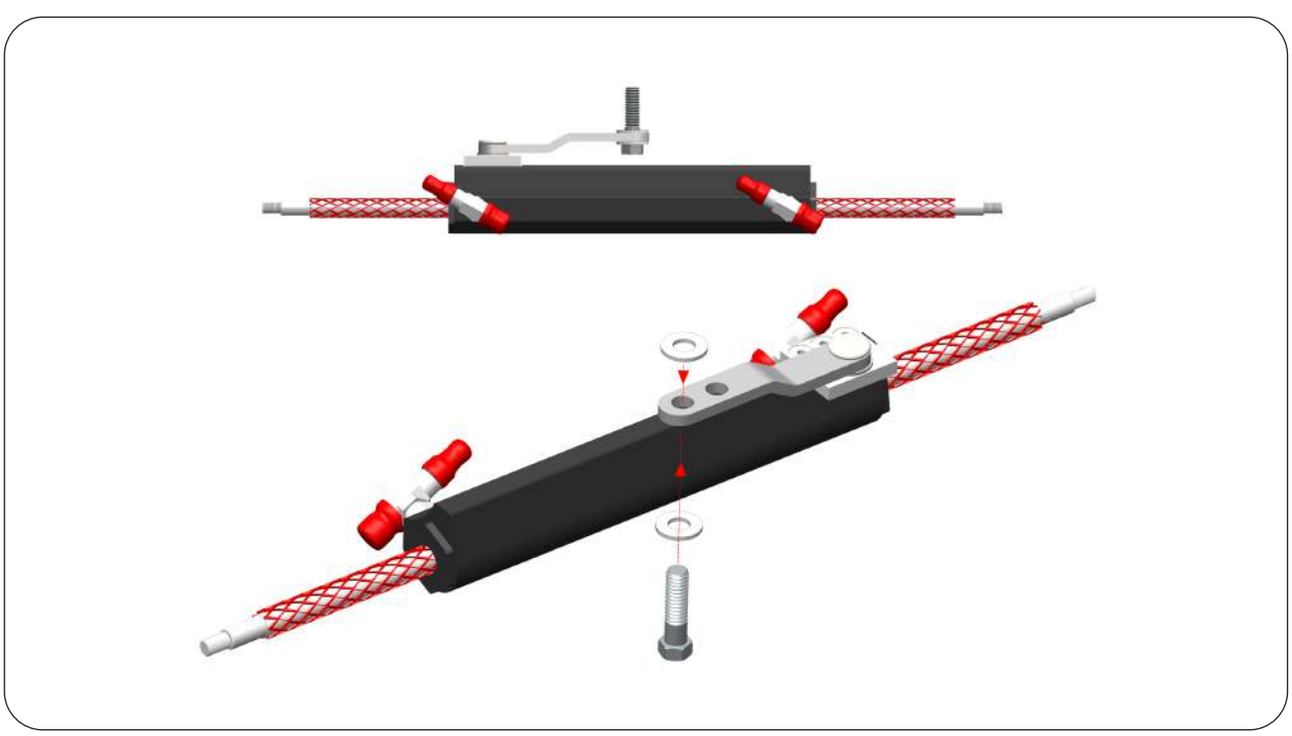

STEP 5 : Position the Engine straight so that its Engine Arm is perpendicular to the Transom. Connect the Tiller Arm (2) of Cylinder to the Engine Arm by means of the Hex Stud (8). Tighten it by using a 14mm Wrench with a torque of 20 Nm (14.75 lb ft). Tighten the Nyloc Nut of Hex Stud by using a 14mm Wrench with a torque of 20 Nm (14.75 lb ft). After tightening the Nyloc Nut, check for the right torque 20 Nm (14.75 lb ft) of the Hex Stud (8).

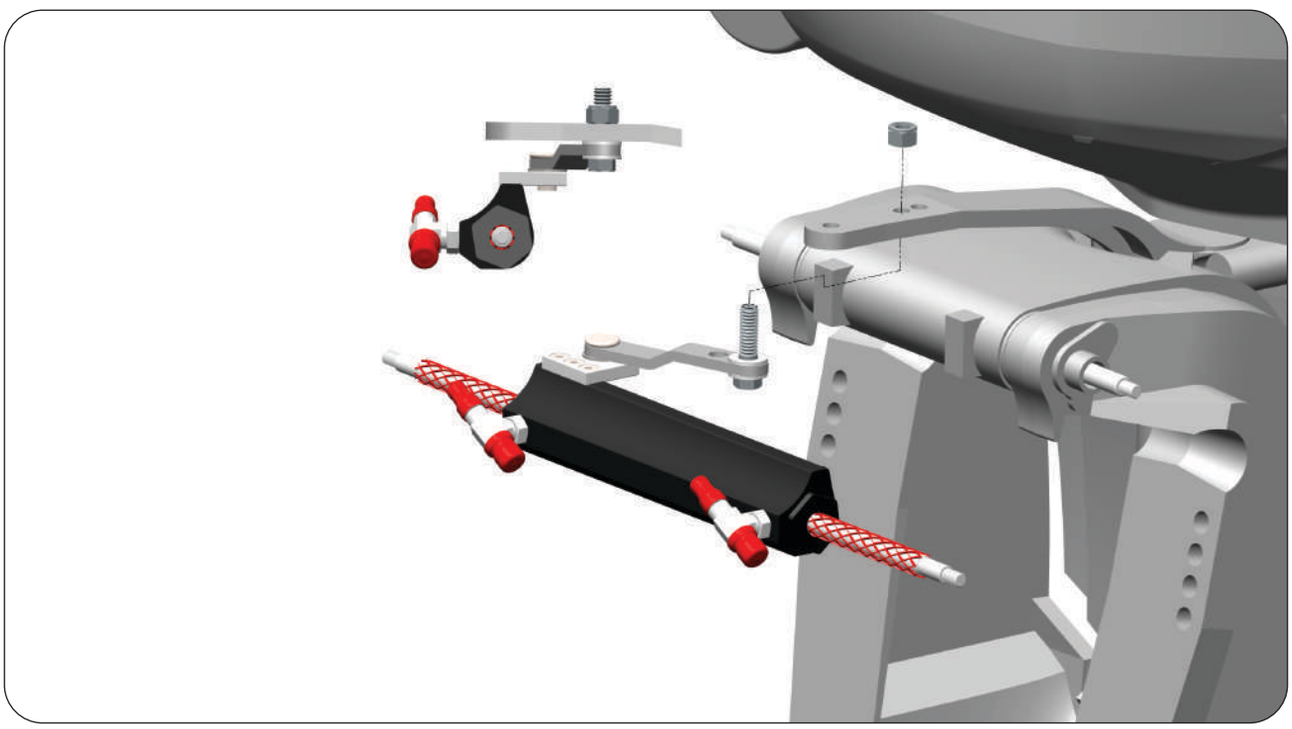

STEP 6 : Remove the Piston Rod Protector before assembling the Support Bracket (3).

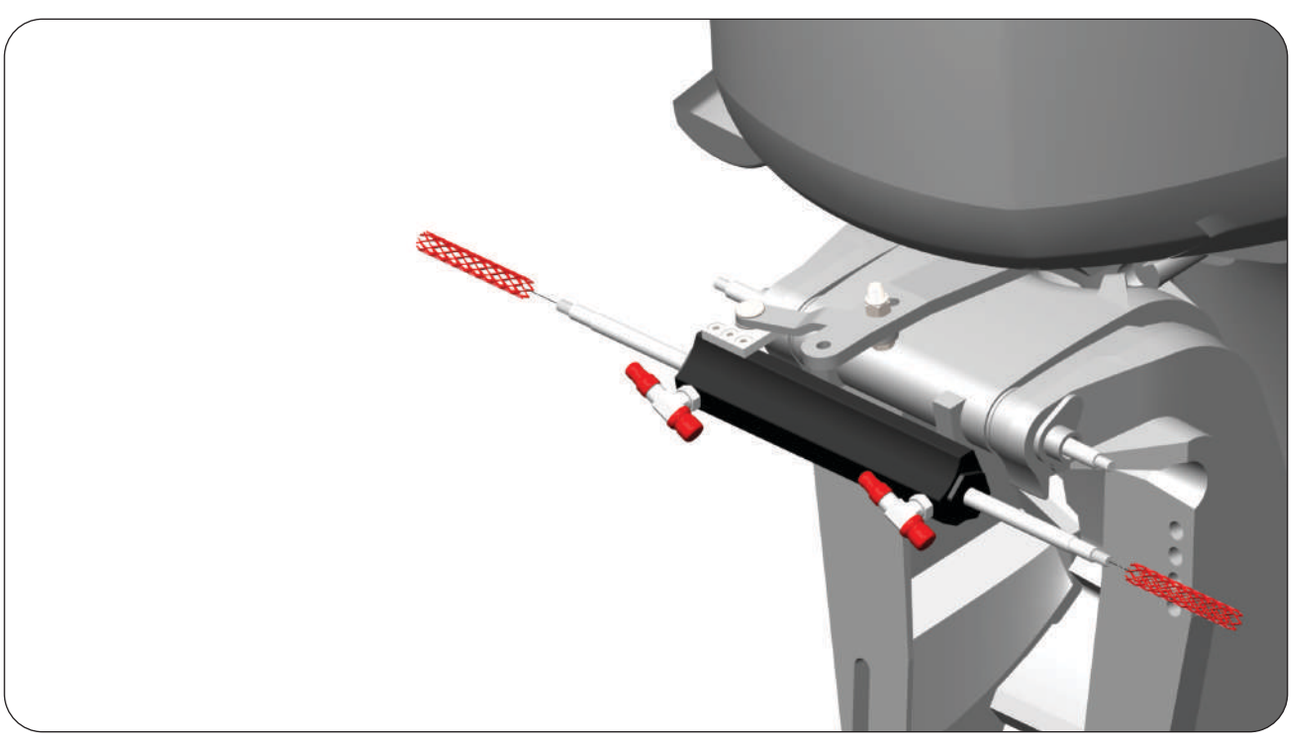

STEP 7 : Insert the Bush (7), Mounting Spacer (6) and then Spacers / Washer (5) as shown. Choose the correct number of Washers for the Tilt Tube Rod. In this phase ensure that the cylinder body is centered on the Piston Rod (1) and that the Engine is perpendicular to the Transom.

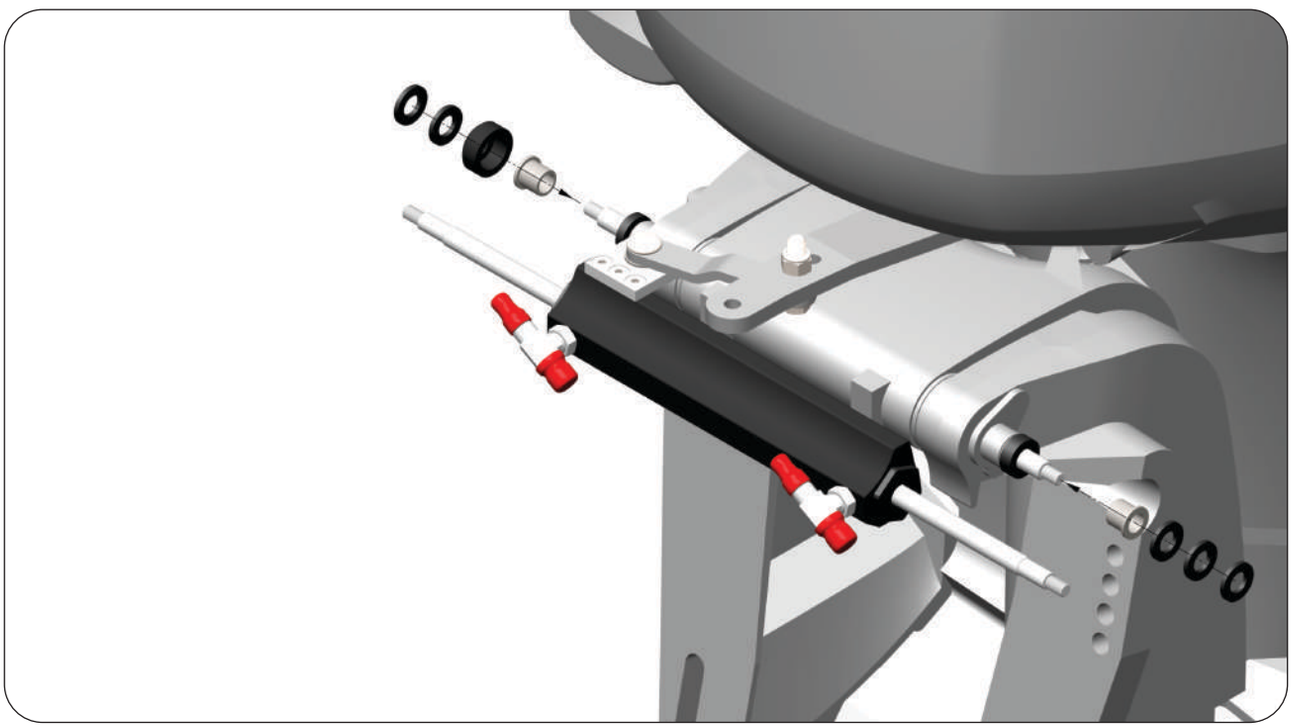

STEP 8 : Insert the right and left Support Brackets (3) by connecting both the Piston (1) & Support Rods (4) as shown in the picture.

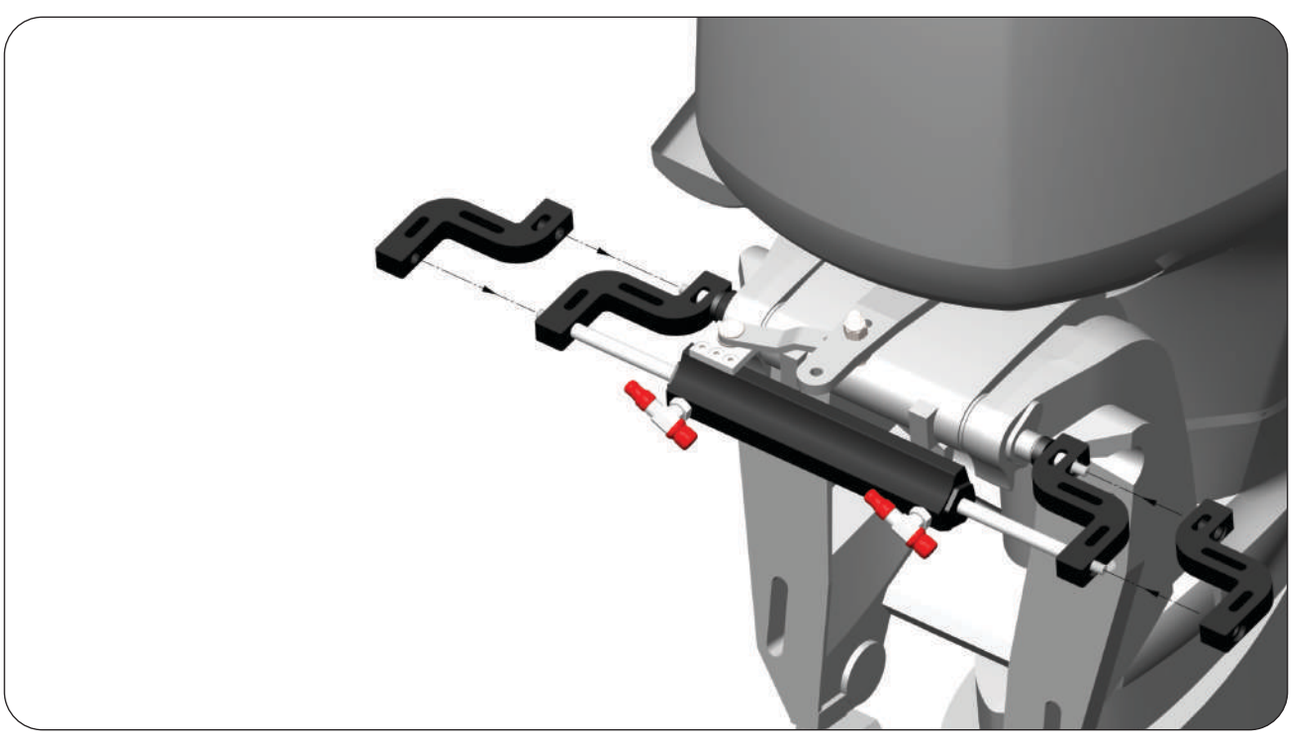

STEP 9 : Grease the Nyloc Nut threads with any Anti-Seize Grease. Insert the Washers (11) and Nyloc Nut (9) on the two ends of the Support Rod (4) and Piston Rod (1). Tighten them by using a 13 mm Wrench with a torque of 70 Nm (52lb ft).

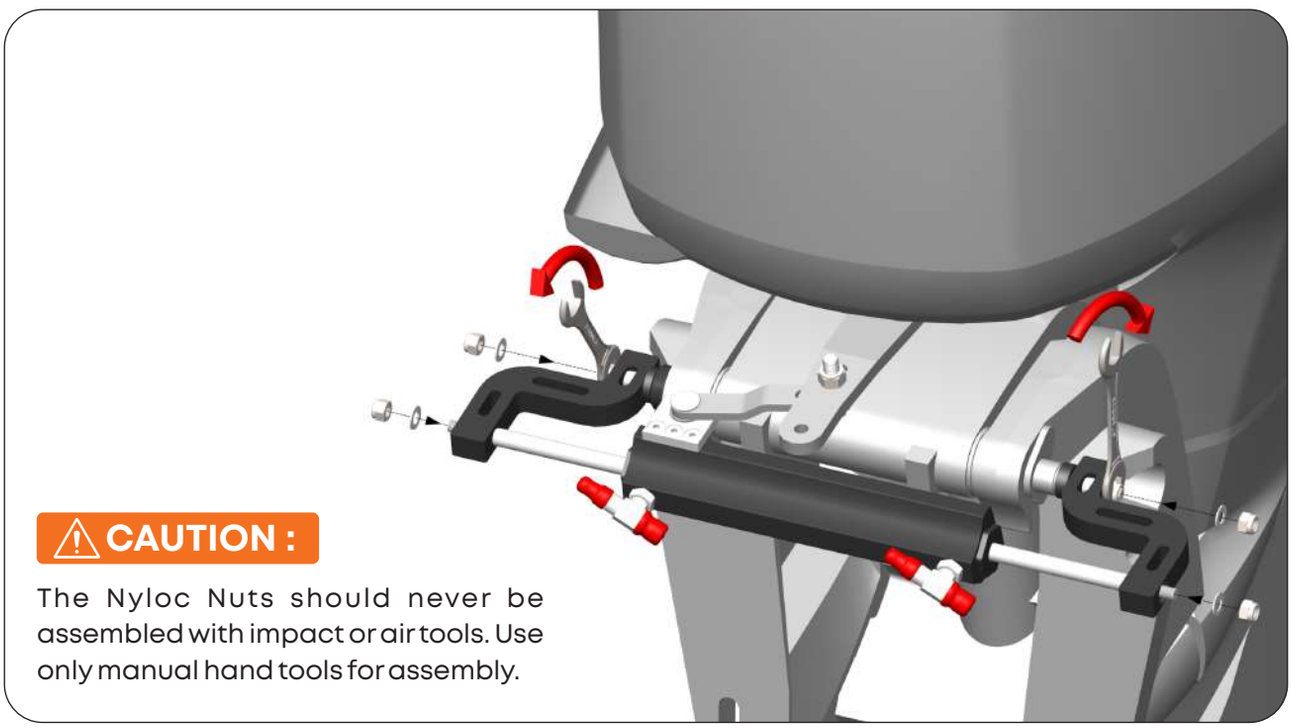

⚠ CAUTION :

The Nyloc Nuts should never be assembled with impact or air tools. Use only manual hand tools for assembly.

STEP 10 : Adjust the space on the Tilt Tube with the help of tightening the Mounting Spacers (6) until the clearance is eliminated.

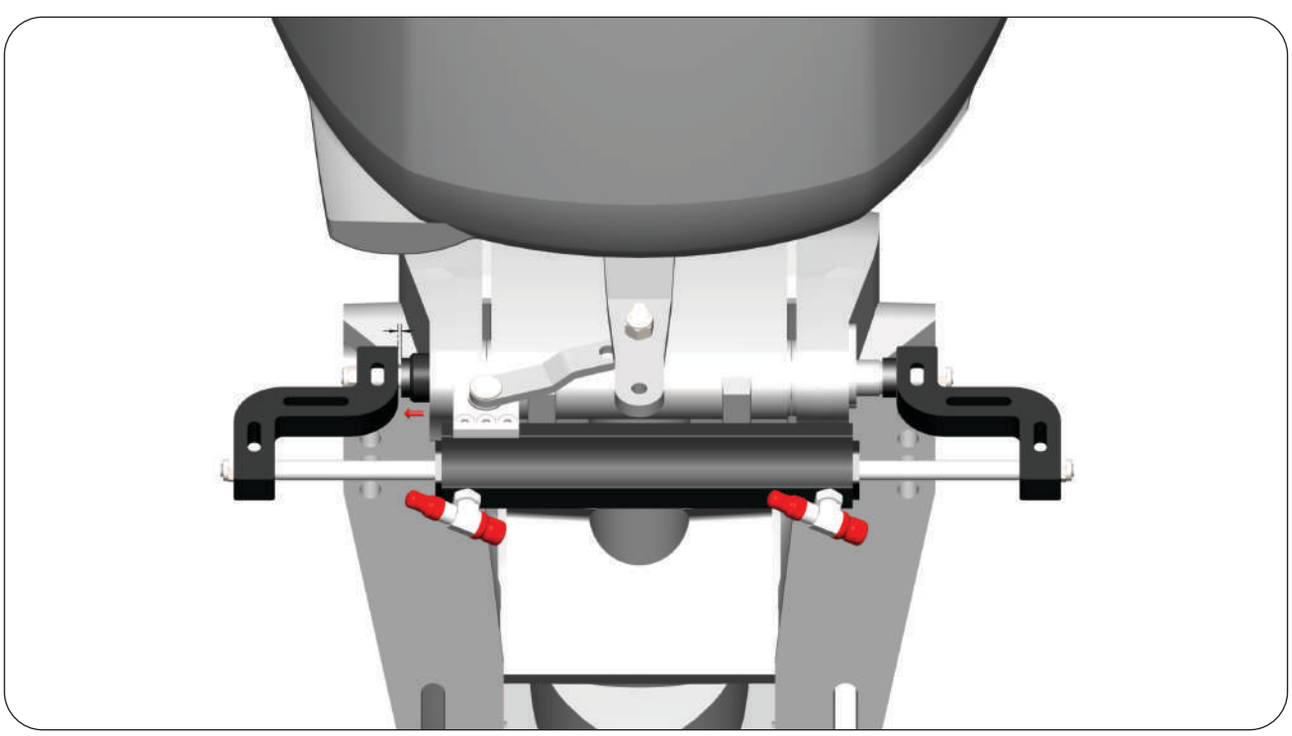

STEP 11 : Verify if the Cylinder installation is correct by manually moving the engine on the Starboard & Port Side. The displacement must be as symmetric as much as possible between Port and Starboard so that the Steering angle is the same on both sides.

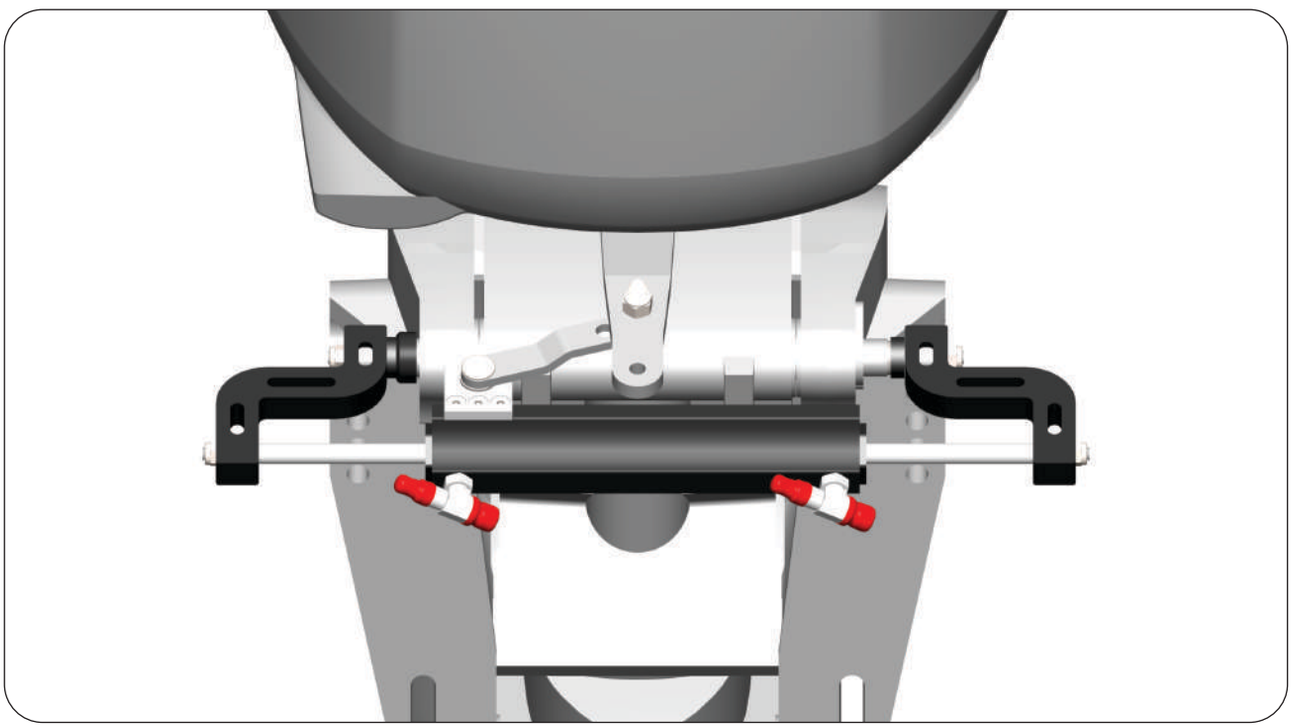

3.6 HOSE CONNECTION (CT-5.0)

⚠ SKILLED LABOR REQUIRED :

Hydraulic Hose Kits and the way they are installed are very critical to the safe operation of The Steering System. Multisteer Recommends the use of Multisteer Hose Kits or exact equivalent ONLY. Use of any other Hoses may drastically reduce or affect the performance of the Steering System and Safety.

⚠ WARNING :

DO NOT cut the Multiflex Hoses. Cutting the Hoses will make it useless.

POINTS TO READ BEFORE CONNECTING HOSES:

1. DO NOT use any pipe / plumbing sealant on the Hose or fitting.
2. DO NOT remove protective covers at the end fittings until the Hoses have been properly routed and are ready to be connected to the Helm pump or Hydraulic Cylinder.
3. Before, during and after the connection of Hoses, they MUST be protected from chaffing, rubbing and contact or interference with assembly screws or sharp edges of any type.
4. DO NOT install Hoses in the area where they are exposed to high heat or highly corrosive areas.
5. Minimum Bend Radius for Hoses is 100 mm (4 Inches). DO NOT bend the Hoses more than 100 mm (4 Inches) of radius.
6. Ensure sufficient Hose lengths to allow Cylinder movement throughout the turning arc and UP / DOWN trim / tilt settings of engine / engines.

multisteer
BY MULTIFLEX

HOSE CONNECTION

STEP 1 : While installing Hoses, ensure that the Cylinder is in the center of the engine.

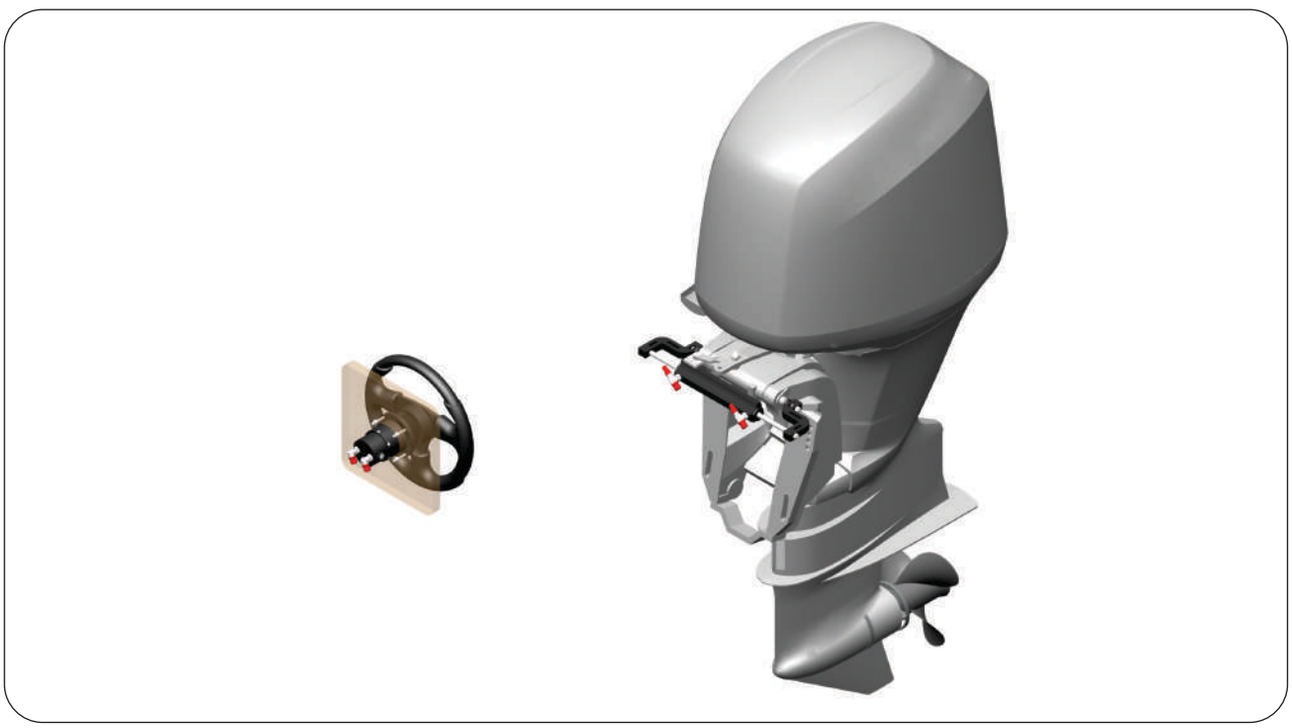

STEP 2 : Remove the thread Protector Caps from both the Elbows of Helm.

STEP 3 : Insert the Hose Fittings into both the Elbows of Helm. Tighten the Hex Nut on the Hose Fitting by using 19 mm Wrench with a torque of 15 Nm (11.06 lb ft).

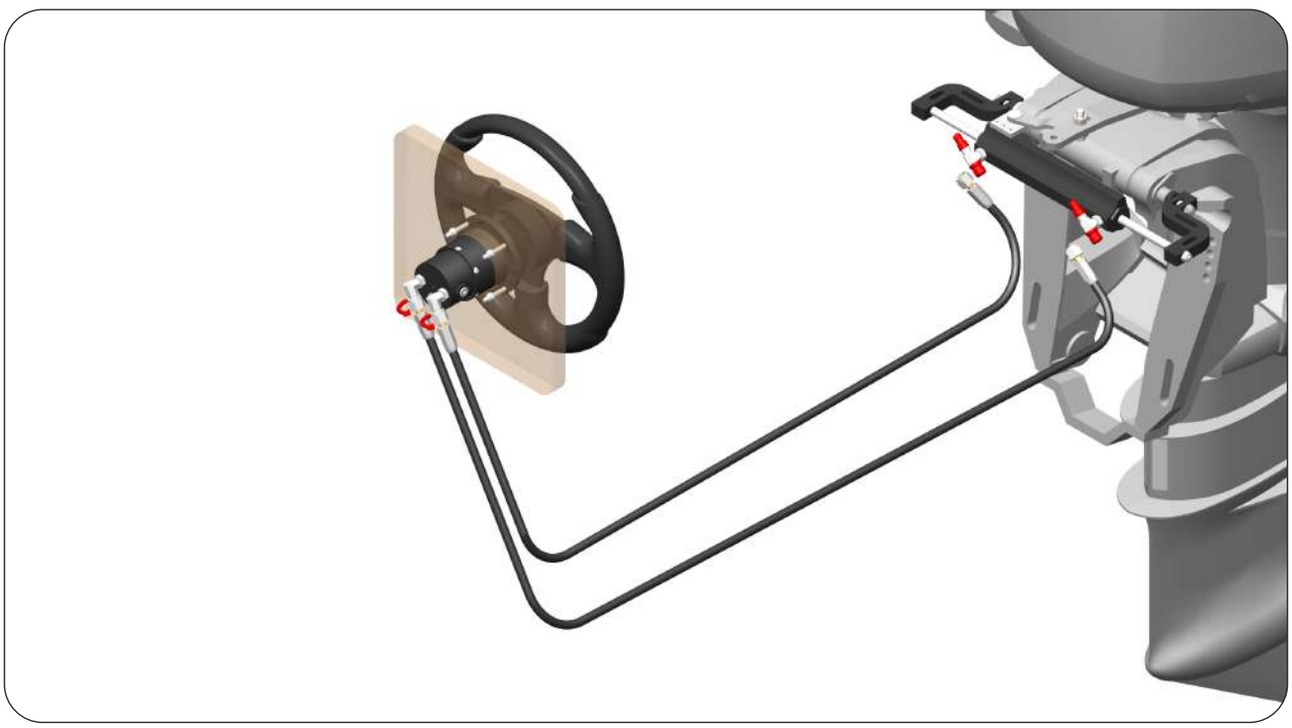

STEP 4 : Remove the thread protector caps from both the T-Fitting of Cylinder.

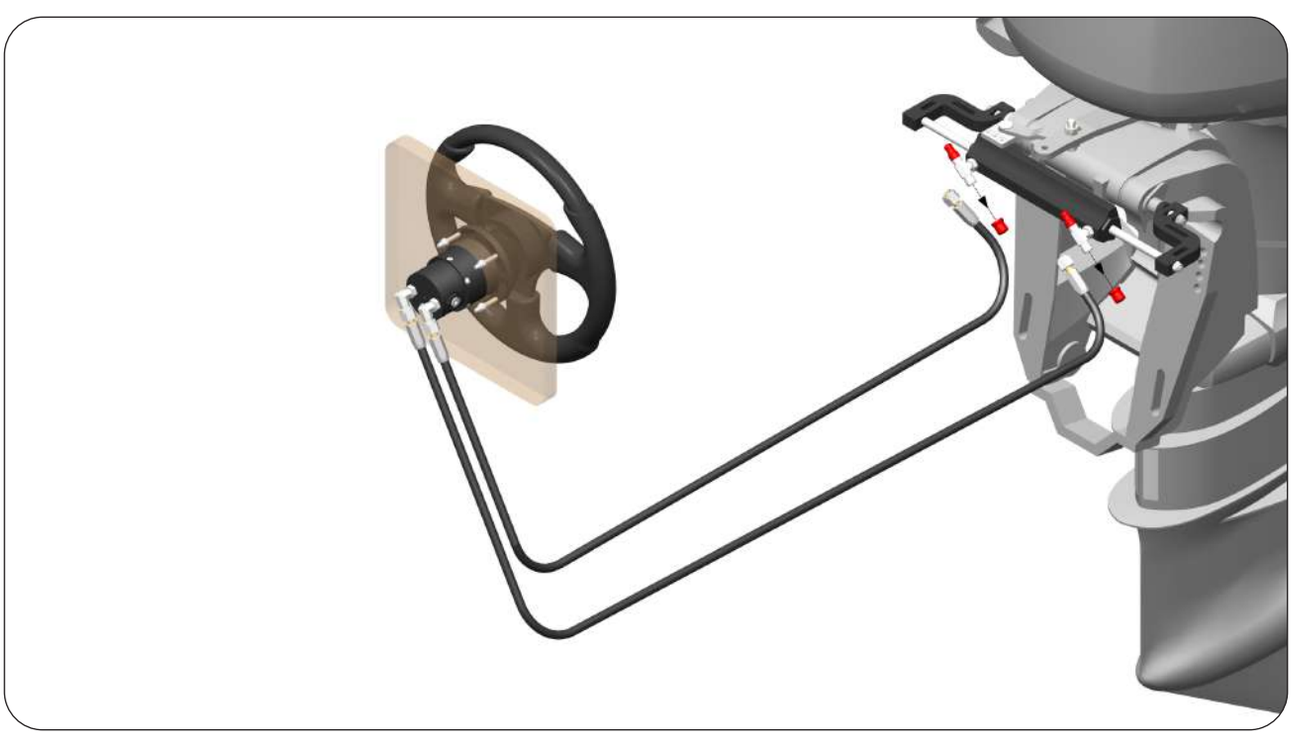

STEP 5 : Insert the Hose Fitting from Starboard Side of Helm into the Port Side Hose Fitting of Cylinder & vice versa. Tighten the Hex Nut on the Hose Fitting by using 19 mm Wrench with a torque of 15 Nm (11.06 lb ft).

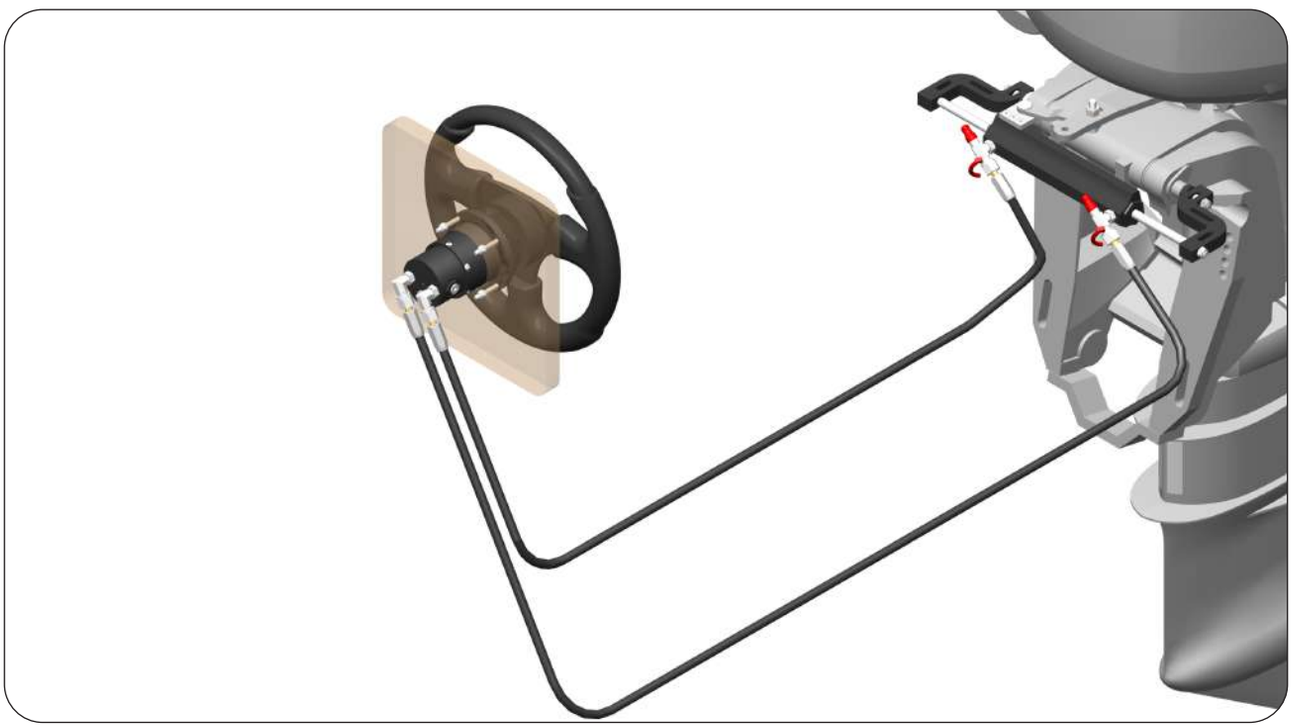

STEP 6 : Ensure that all the Hose Fittings should be tighten properly. Hoses should not be bent in excess. Minimum Hose bent radius is 100 mm (4 Inch). Ensure that there should be no interference during engine tilting as well as no interference with the transom.

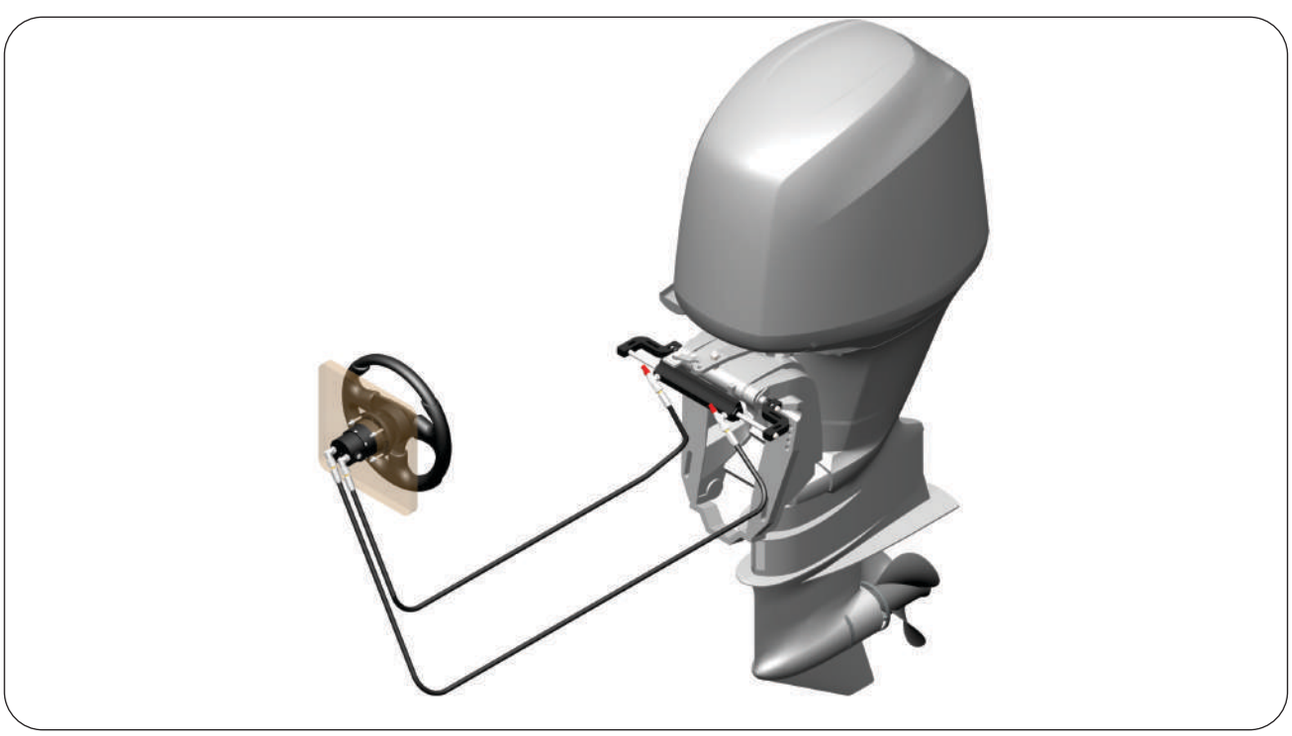

3.7 OIL FILLING AND PURGING PROCEDURE

⚠ SKILLED LABOR REQUIRED :

STEP 7 : For Oil Filling and Purging, it is necessary to use the Oil Filling Kit.

STEP 8 : Replace the Oil Bottle fill cap with the Oil Filling Kit cap as shown in the picture.

STEP 9 : Remove the Oil Filling Plug of Helm.

STEP 10 : Insert the threaded Port of pipe into the Oil Filling Port of Helm. Turn the bottle upside down and carefully remove the other side of cap to ease the Oil passage towards the Helm. Fill the Helm until no air bubbles are visible in the pipe.

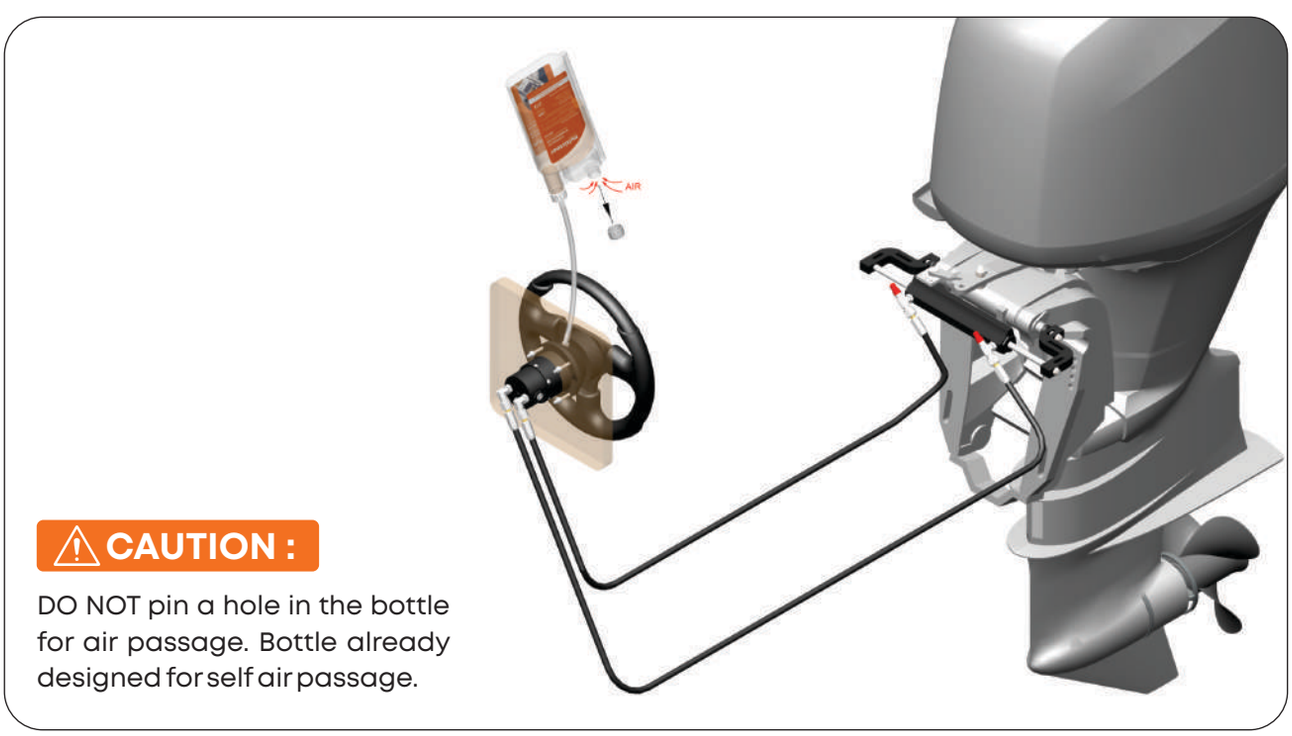

⚠ CAUTION :

DO NOT pin a hole in the bottle for air passage. Bottle already designed for self air passage.

STEP 11 : Remove the Protector Cap of both the air bleeders.

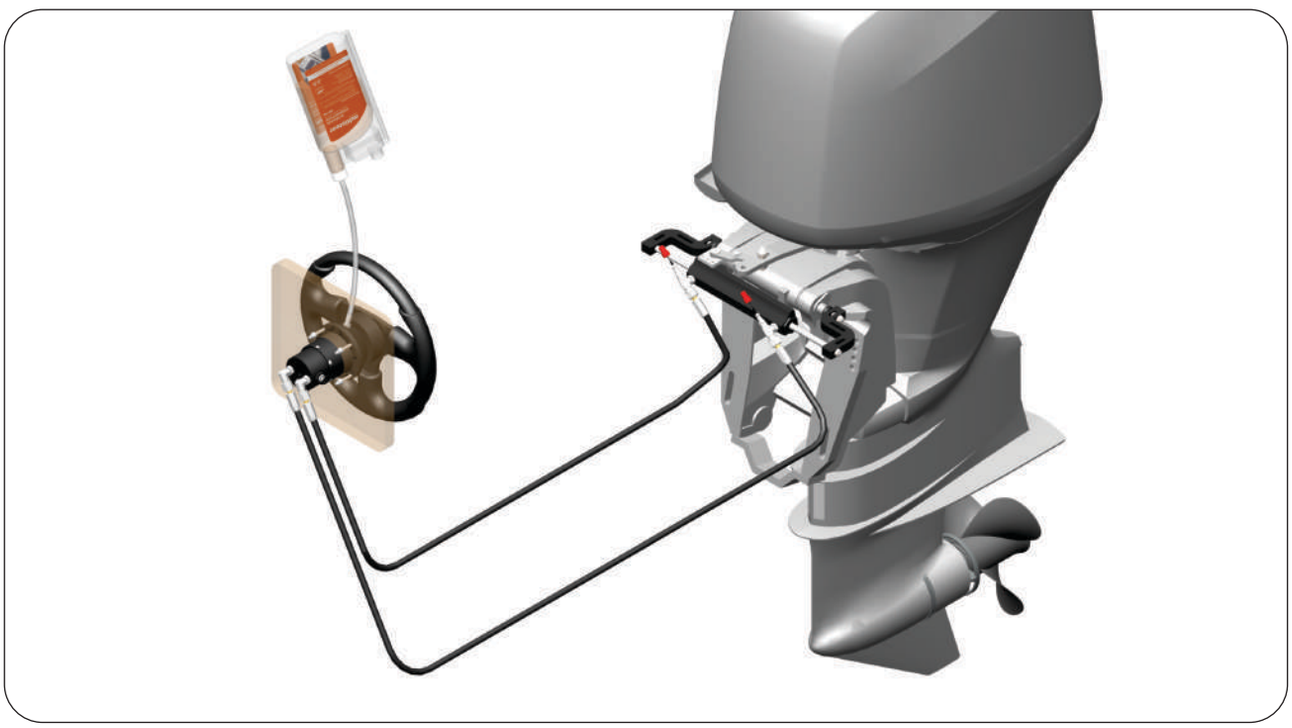

STEP 12 : Insert the other pipe supplied with the Cylinder into the air bleeders for collecting the Oil, coming out from the air bleeders during purging process.

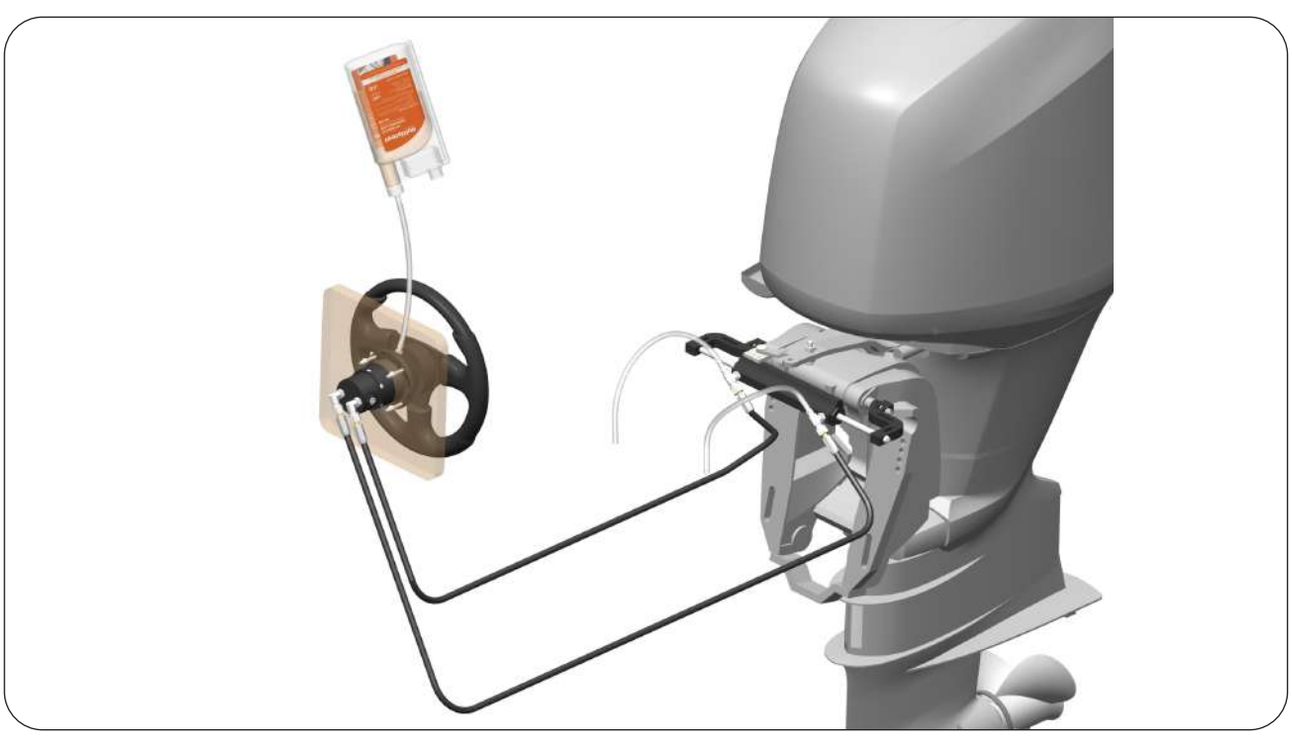

STEP 13 : Turn the Steering Wheel slowly towards Starboard Side, so that the Oil can come out of Hoses. Unscrew the Port Side air bleeder and allow the air & Oil (air bubbles) come out from air bleeder.

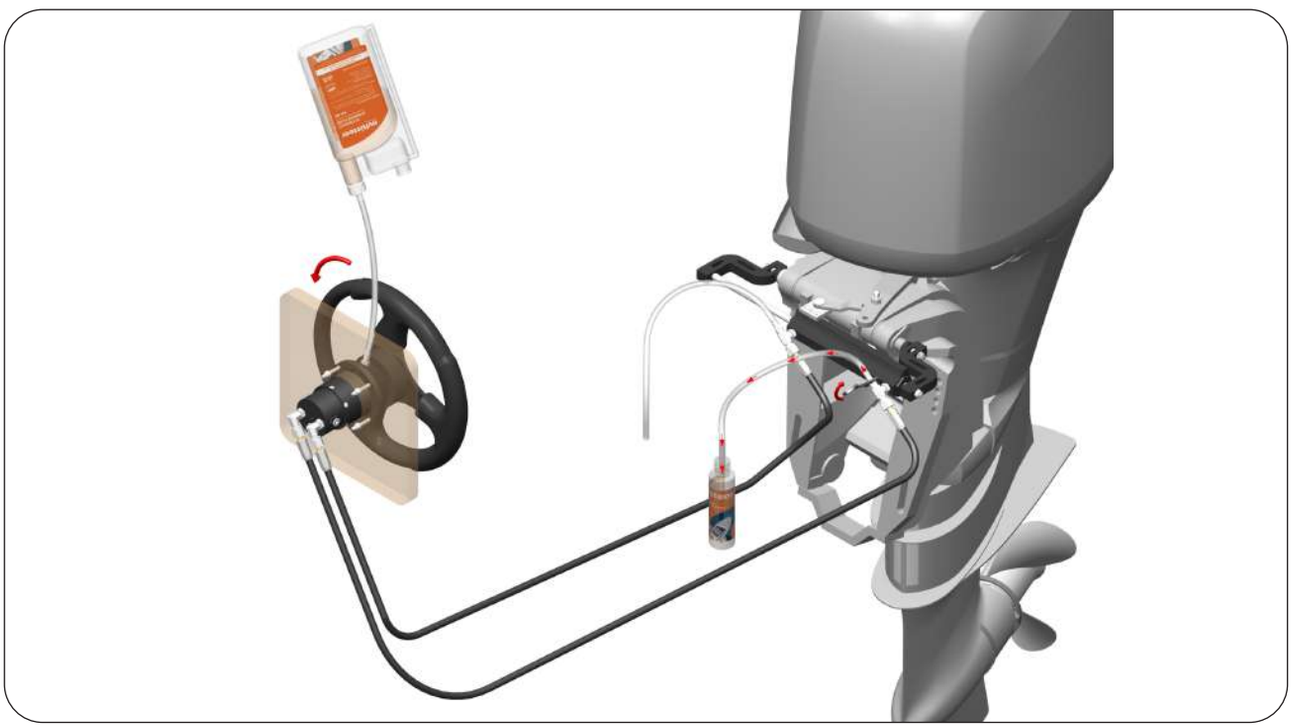

STEP 14 : Continue to turn the Steering Wheel towards Starboard Side. When the Oil comes out from air bleeder without air bubbles then carefully close the air bleeder. Do not overtight the air bleeder. Continue to turn the Steering Wheel in the same direction to fill the Cylinder chamber. During this phase, the Cylinder body will move to the opposite direction up to the end stroke.

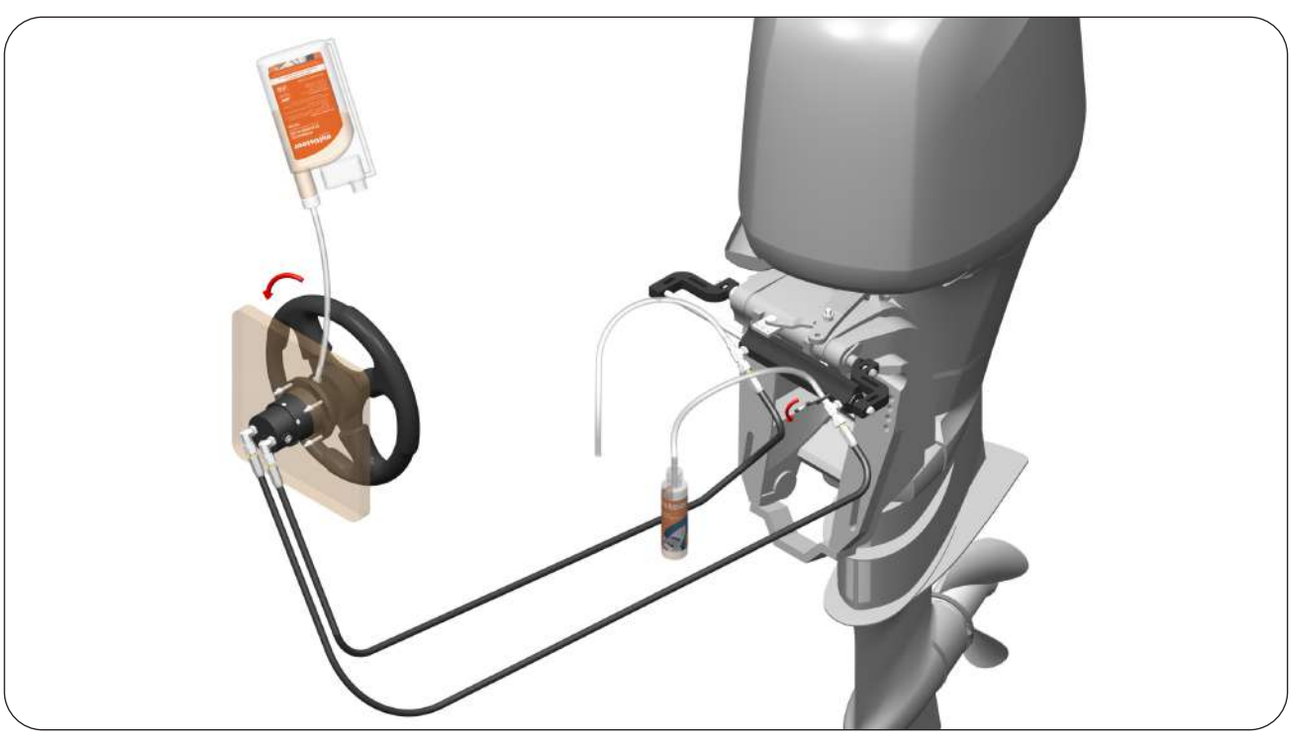

STEP 15 : Similarly turn the Steering Wheel slowly towards Port Side, so that the Oil can come out of Hoses. Unscrew the Starboard Side air bleeder and allow the air & Oil (air bubbles) come out from air bleeder.

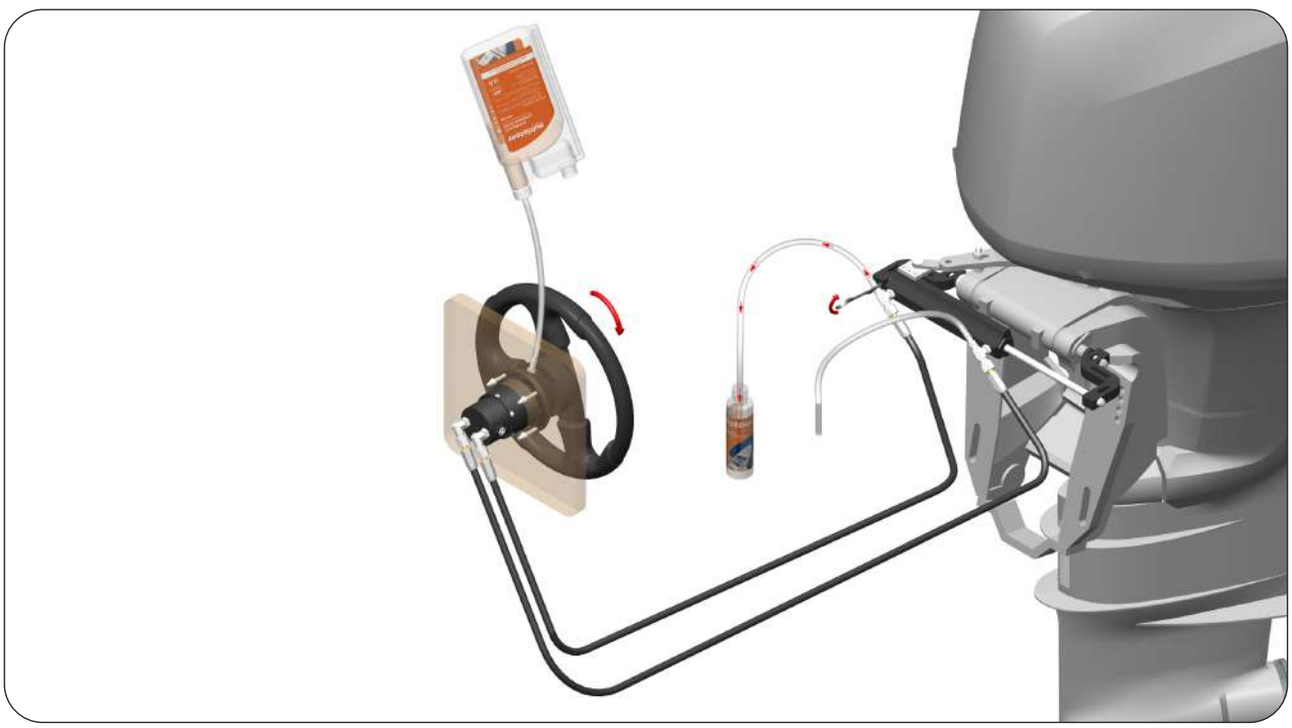

STEP 16 : Continue to turn the Steering Wheel towards Port Side. When the Oil comes out from air bleeder without air bubbles then carefully close the air bleeder. Do not overtight the air bleeder. Continue to turn the Steering Wheel in the same direction to fill the Cylinder chamber. During this phase the Cylinder body will move to the opposite direction up to the end stroke.

STEP 17 : After completion of purging process, remove the Oil Bottle, Oil Filling Kit & Oil Collection Kit. Insert the Oil Filling Plug and Protective Caps.

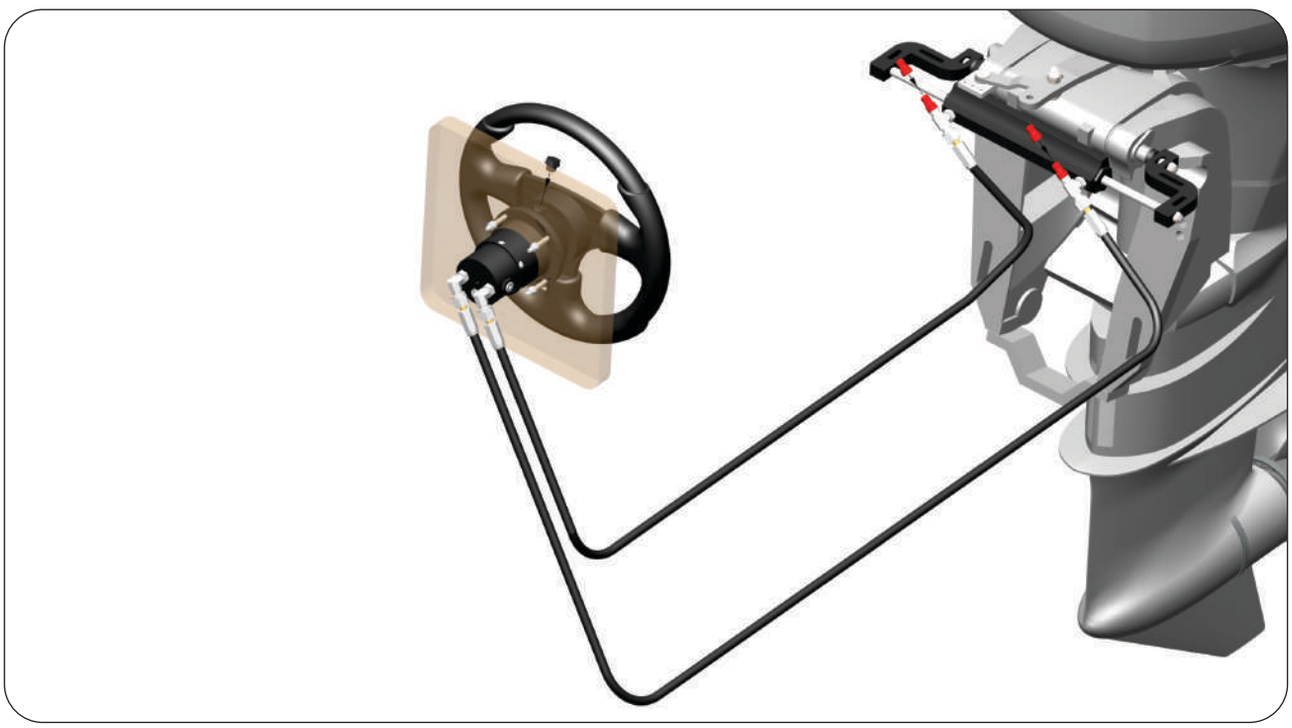

STEP 18 : After tightening the Oil Filling Plug, some amount of Oil will come out around the plug for some period of time when the Wheel is turned lock to lock. This Oil seepage will be over when the system is stabilized and no air is trapped inside the system.

3.8 TESTING STEERING SYSTEM FOR AIR :

- Place the Engine in the Center Position (mid-stroke position).
- Manually push Engine back and forth. While pushing the Engine, observe the displacement of Cylinder.
- If the Cylinder moves more than 2-3 mm (0.07-0.11 inch), this indicates that there is still air remaining in the system & further purging is required.
- Continue the purging procedure till the displacement of Cylinder is less than 2-3 mm (0.07-0.11 inch).

SYSTEM DIAGRAM

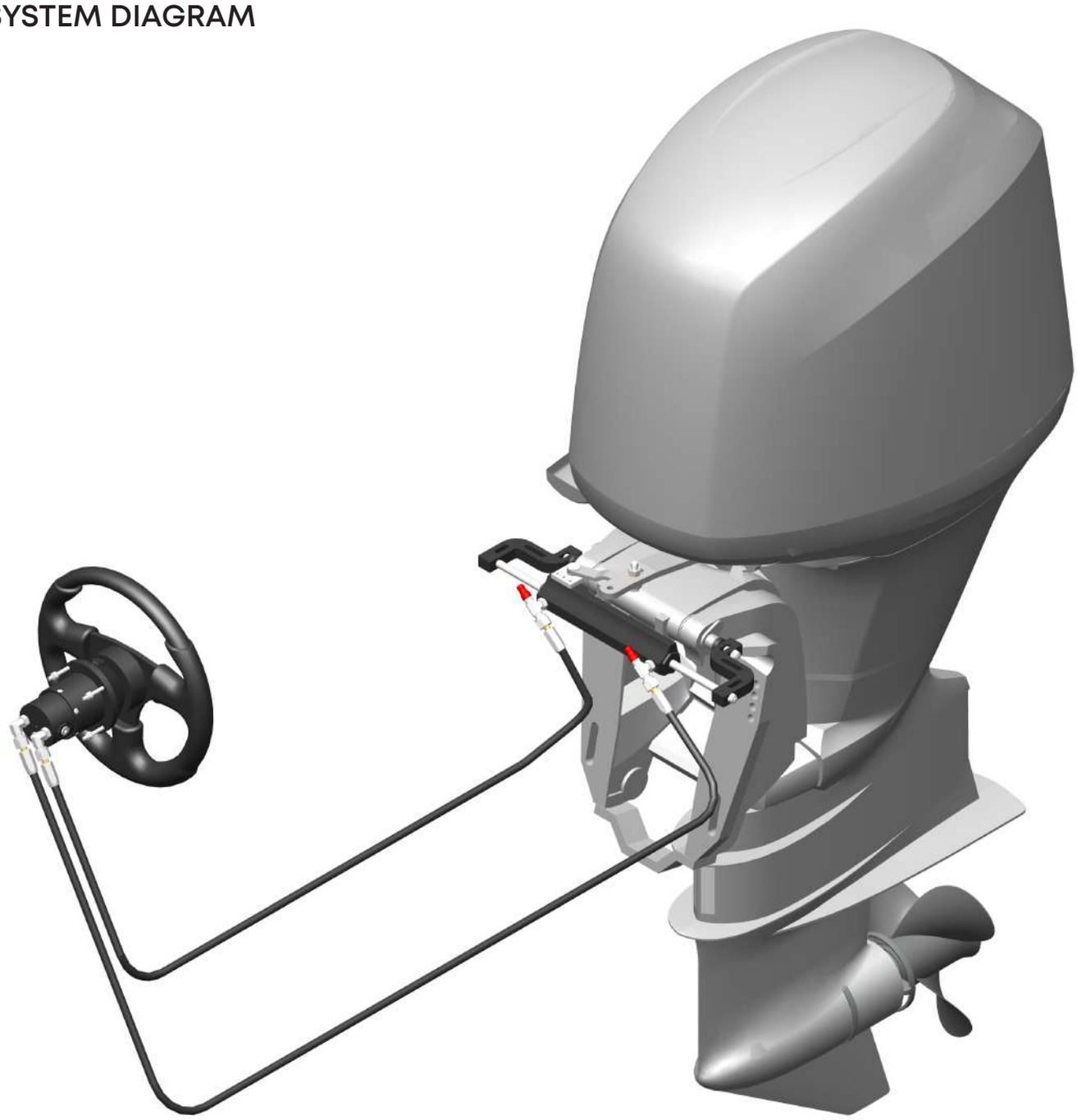

multisteer
BY MULTIFLEX

SECTION 4 – TROUBLESHOOTING

4.1 FAULTS, CAUSE & SOLUTION

Below are most common faults and their solutions

FAULT	CAUSE	SOLUTION
1. During filling, the Helm becomes Completely jammed.	a) Blockage in Steering System	Remove all Steering line. Blow air through lines. If air is obstructed through the line, then the Steering line should be replaced.
2. System is very difficult to fill, air keeps burping out top of Helm even after system appears full.	a) Air in system b) Bleed Fitting leakage	Bleed the Steering System again. Tighten Bleeder, replace if leaks continues.
3. Steering is stiff & hard to turn, even when boat is Not moving & engines are OFF.	a) Adjusting Nut on support rod is over tightened b) Restriction in Hoses c) Air in system	Nut should be hand tight. Check the right oil way. Bleed the Steering System .
4. Steering is easy to turn at the dock, but becomes hard to turn when system is underway.	a) Steering Wheel is too small b) Incorrect Engine Setting	Fit the proper size Wheel. Adjust the engine tab.

4.2 DISASSEMBLING

For any reason, if the system has to be removed, it is very important to dispose the waste properly considering the environment.

It is requested to return this product to a nearby registered dismantler or recycler while disposing this product.

⚠ CAUTION :

The Steering System CONTAINS POLLUTANT FLUIDS that must be disposed of according to local government regulations.

4.3 DISMANTLING STEERING WHEEL

SW-PL

Use a specific dismantling tool to remove the Steering Wheel from the Helm Shaft.

⚠ CAUTION :

Never use a hammer or other hammering tools that could cause irreparable damage to the pump or pump components.

multisteer
BY MULTIFLEX

SECTION 5 – REPLACEABLE ITEMS AND SEALS

5.1 HELM HP-16

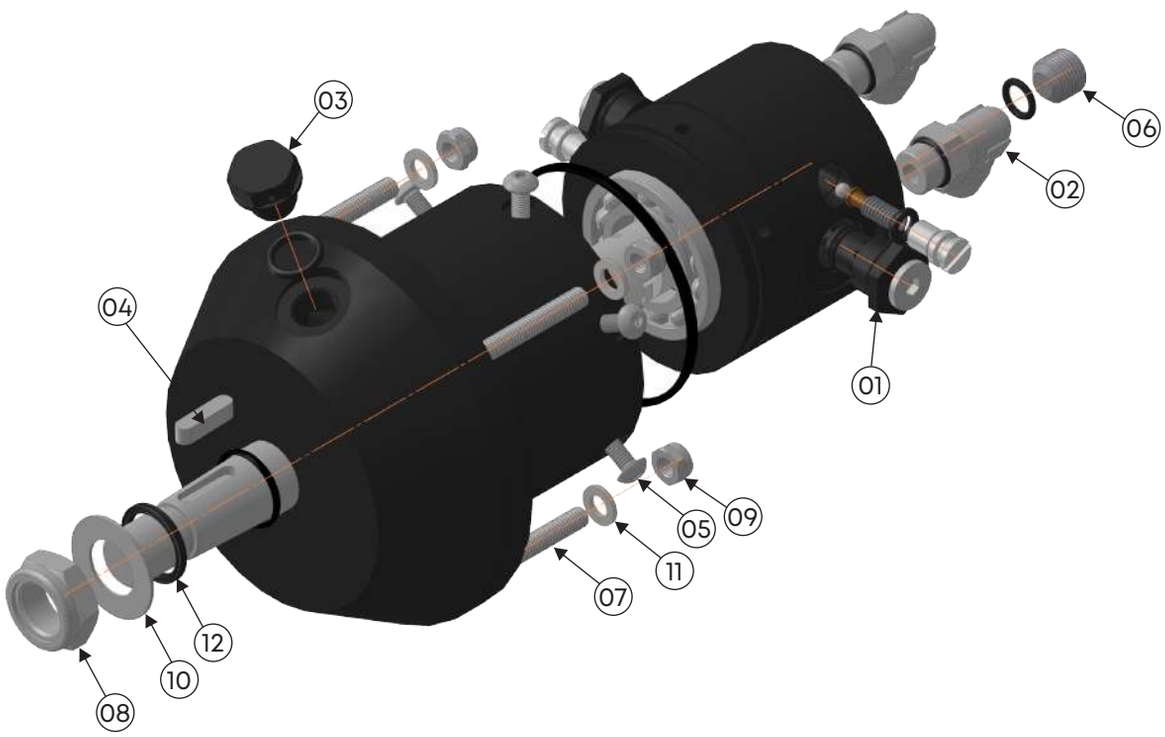

Item No.	Part No.	Description	Qty.
1	HP-EC1	End Cap Assembly	2
2	EB1	Elbow Assembly	2
3	VP1	Oil Fill Plug with Breather Hole / Vented Plug	1
4	HP-WK4	Flat Key	1
5	HP-CS1	Socket Button Head Cap Screw	6
6	HP-GS1	Socket Set Screw (Grub Screw / Dummy Plug)	1
7	HP-FS1	Flange Stud	4
8	HP-HN1	Nyloc Nut For Helm Shaft	1
9	HP-FN1	Nyloc Nut For Flange Stud	4
10	HP-HW1	Helm Shaft Washer	1
11	HP-SW1	Flange Stud Washer	4
12	SK-HP-16	Seal Kit	1

multisteer
BY MULTIFLEX

5.2 FRONT MOUNT CYLINDER OC-115

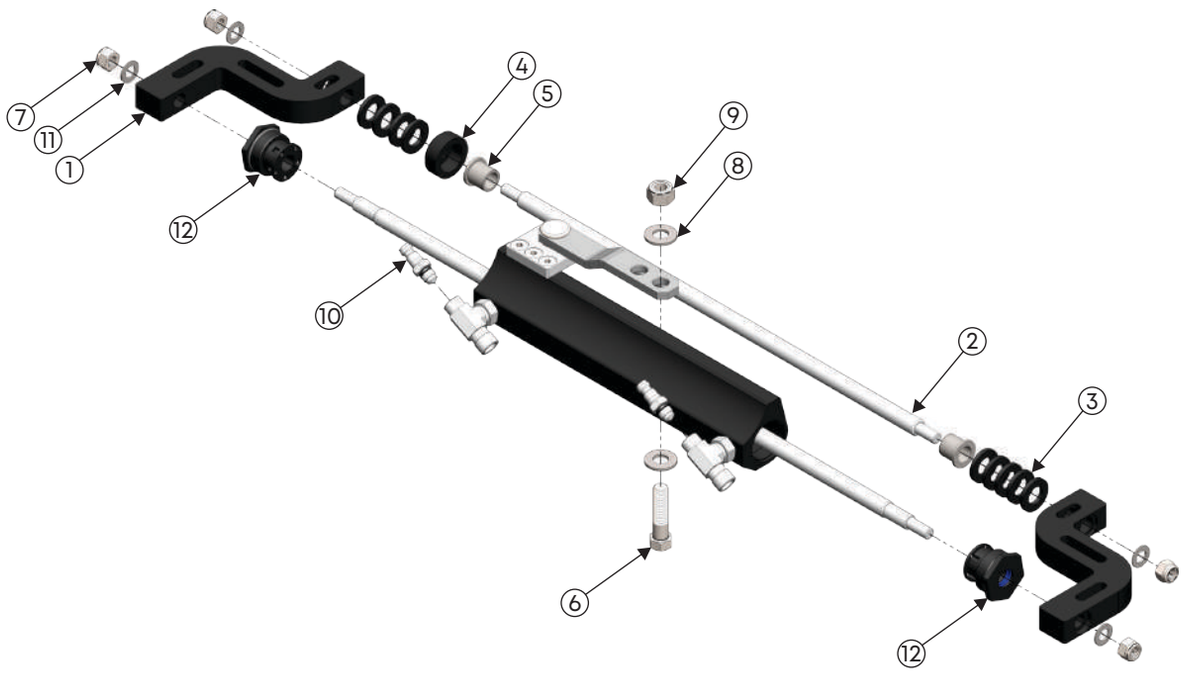

Item No.	Part No.	Description	Qty.
1	OC-SB2	Support Bracket	2
2	OC-SR1	Center Shaft	1
3	OC-SP1	Spacer / Washer For OC-115	9
4	OC-SK4	Mounting Spacer	1
5	OC-SB1	Support Rod Bush	2
6	OC-SD2	Engine Connector Hex Stud	1
7	PR-NT1	Nyloc Nut for Piston Rod	4
8	SD-WS1	Hex Stud Washer	2
9	SD-NT1	Nyloc Nut for Hex Stud	1
10	AB2	Air Bleed Plug	2
11	PR-WS1	Piston Rod Washer	4
12	SK-115	Seal Kit	1

SECTION 6 – MAINTENANCE

6.1 PREVENTIVE MAINTENANCE

Hydraulic Steering System exterior surfaces should be cleaned after every use of the boat. It is very important to clean the Steering System as it is considered a part of your safety gear.

1. When you are in a saltwater environment, the salt will crystallize as the water evaporates and coat all the parts of the Steering Cylinder along with the rest of the boat.
2. We have seen units in the shop that had no seals left; they were being sealed by the salt that had been carried under the wiper seal and then corroded the aluminum away in front of the seal.
3. You must wash this Cylinder with soap and water as frequently as possible in salt water areas.
4. Even if you keep your boat on a trailer but store it near the coast, blowing saltwater will tend to build up salt on the aluminum parts of your system that will corrode over time.
5. Just remember that even stainless will scratch over time from salt crystal deposits. MULTIFLEX recommends after cleaning thoroughly with soap and water use a Corrosion Block product to finish cleaning your Steering Cylinder. (Use it on the Steering Wheel and Shaft also)
6 Get an air compressor with a small tip to blow out the lines.
7. Get all the proper size wrenches that you will need.
8. At this point, if the oil is discolored or muddy looking, you should have your Helm and Cylinder serviced by a qualified shop.
9. While your unit is out being serviced, the rest of the system, Hoses and reservoir, should be thoroughly flushed with mineral spirits and blown dry.
10. Get enough manufacturer's recommended new fluid to fill your entire system. (You MUST NOT reuse the old Oil that was removed from system).
11. Once all your lines and parts are cleaned, put the system back together, refill with new fluid (read the owner's manual) and purge the system.

6.2 ROUTINE MAINTENANCE

Multisteer Steering System if properly installed and maintained, gives you years of safe and reliable performance.

⚠ WARNING : **⚠ SKILLED LABOR REQUIRED :**

The Steering System CONTAINS POLLUTANT FLUIDS that must be disposed of according to local government regulations.

1. Always check Oil level in Helm Pump.
2. Verify Steering response when turning the Steering Wheel.
3. Inspect Steering Hoses & Fittings for damages, wear & leaks.
4. Check tightness of all Fasteners / Fittings to the system.
5. Check the signs of corrosion.
6. Remove support rod from engine Steering / Tilt Tube. Clean engine Steering / Tilt Tube and re-grease using approved quality of marine grease.
7. Remove Steering Wheel and re-grease Wheel Shaft using approved quality of marine grease.
8. Inspect Hydraulic Oil for cleanliness, flush if required.

UPGRADE TO **STEERLYTE** POWER STEERING SYSTEM

multisteer
BY MULTIFLEX

+91 9175279132 | technical@multiflexmarine.com | www.multiflexmarine.com
©2020 | Multiflex Marine | All Rights Reserved